www.elektor.com SEPTEMBER 2007 £ 3.80

elektor electronics

leading the way

SHINE ON, OLD BATTERIES!

Free LED driver CIRCUIT BOARD

get a move on
PC Gamepad has tilt sensors added

on the test bench
11 Audio amplifier bricks

Wireless Household Energy Monitor

Ultrasound & Bat Receiver based on SDR

FM Superreg Receiver

Four-channel Logic Analyser

R39
09
9 770268 45112 8

THUNDEROUS KITS FROM DOWN UNDER

Visit us at www.jaycarelectronics.co.uk and obtain your free copy of our 430+ page, full colour catalogue. We have an extensive range of electronics kits and the best in innovative gadgets.

POST AND PACKING CHARGES:

Order Value	Cost	Order Value	Cost
£20 - £49.99	£5	£200 - £499.99	£30
£50 - £99.99	£10	£500+	£40
£100 - £199.99	£20		

Max weight 12lb (5kg). Heavier parcels POA. Minimum order £10.

Note: Products are dispatched from Australia, so local customs duty and taxes may apply.

How to order:
Phone: Call Australian Eastern Standard Time Mon-Fri on 0800 032 7241
Email: techstore@jaycarelectronics.co.uk
Post: PO BOX 6424, Silverwater NSW 1811. Australia
Expect 10-14 Days For Air parcel delivery

Universal Speaker Protection and Muting Module Kit

KC-5450 £8.75 + post & packing

Protects your expensive speakers against damage in the event of catastrophic amplifier failure such as a shorted output transistor. In addition, the circuit also banishes those annoying thumps that occur when many amplifiers are switched on or off, especially when the volume is set to a high level.

The design also incorporates an optional over temperature heat-sensor that will disconnect the speakers if the output stage gets too hot. Configurable for supply voltages between 22VDC-70VDC. Supplied with a silk screened PCB, relay and all electronic components.

4 Channel Guitar Amplifier Kit

KC-5448 £28.75 + post & packing

The input sensitivity of each of the four channels is adjustable from a few millivolts to over 1 volt, so you can plug in a range of input signals from a microphone to a line level signal from a CD player etc. A headphone amplifier circuit is also included for monitoring purposes. A three stage EQ is also integrated, making this a very versatile mixer that will operate from 12VDC. Kit includes PCB with overlay and all electronic components.

Stereo VU and Peak Meter Kit

KC-5447 £20.50 + post & packing

Accurately monitor audio signals to prevent signal clipping and ensure optimum recording levels. This unit is very responsive and uses two 16-segment bargraphs to display signal levels and transient peaks in real time. There are a number of display options to select, and both the signal threshold and signal level calibration for each segment are adjustable. Kit supplied with PCBs, LCD and all electronic components. Accuracy within 1dB for signals above -40dB.

• Case not included use HB-6082 £2.95

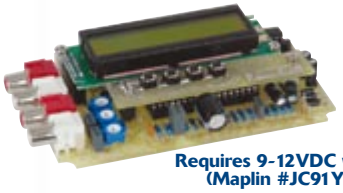

Requires 9-12VDC wall adaptor (Maplin #JC91Y £14.99)

Water Level Indicator Kit

KC-5449 £10.25 + post & packing

This simple circuit illuminates a string of LEDs to quickly indicate the water level in a rainwater tank. The more LEDs that illuminate, the higher the water level is inside the tank. The input signal is provided by ten sensors located in the water tank and connected to the indicator unit via-light duty figure-8 cable. Kit supplied with PCB with overlay, machined case with screenprinted lid and all electronic components.

• Requires: 8mm (OD) PVC hose/pipe (length required depending on depth of tank)

Beat water restrictions with a water tank and this great kit!

Requires 9-12VDC or AC wall adaptor (Maplin JC91Y £14.99)

IR Remote Control Extender MKII

KC-5432 £7.25 + post & packing

Operate your DVD player or digital decoder using its remote control from another room. It picks up the signal from the remote control and sends it via a 2-wire cable to an infrared LED located close to the device. This improved model features fast data transfer, capable of transmitting Foxtel digital remote control signals using the Pace 400 series decoder. Kit supplied with case, screen printed front panel, PCB with overlay and all electronic components.

Improved model for 2007

Requires 9VDC wall adaptor (Maplin #GS74R £10.99)

2 Channel USB Oscilloscope

QC-1930 £83.75 + post & packing

Using Plug 'n Play USB technology and providing full optical isolation from the computer, this oscilloscope is easy to setup and use, as well as providing protection for the computer. The software is a fully featured chart recorder, function generator, logic generator, logic analyser, and spectrum analyser all in one easy to use package. See website for specifications.

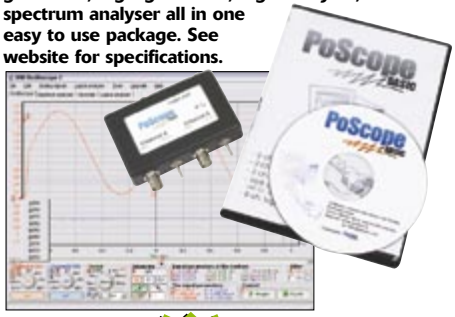

Fuel Cut Defeat Kit

KC-5439 £6.00 + post & packing

This simple kit enables you to defeat the factory fuel cut-out signal from your car's ECU and allows your turbo charger to go beyond the typical 15-17psi factory boost limit.

Note: Care should be taken to ensure that the boost level and fuel mixture don't reach unsafe levels. Kit supplied with PCB, and all electronic components.

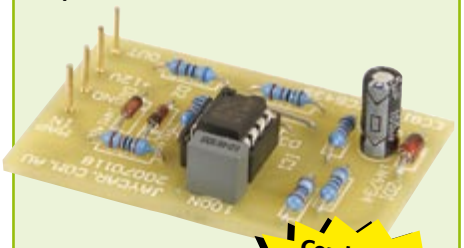

Combine these two kits to get the most cost effective performance increase on the market!

Variable Boost Kit for Turbochargers

KC-5438 £6.00 + post & packing

It's a very simple circuit with only a few components to modify the factory boost levels. It works by intercepting the boost signal from the car's engine management computer and modifying the duty cycle of the solenoid signal. Kit supplied in short form with PCB and overlay, and all specified electronic components.

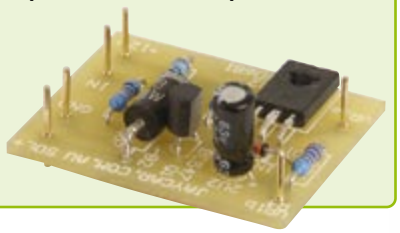

Log on to www.jaycarelectronics.co.uk/elektor for your FREE catalogue!

0800 032 7241

(Monday - Friday 09.00 to 17.30 GMT + 10 hours only).
For those who want to write: 100 Silverwater Rd Silverwater NSW 2128 Sydney AUSTRALIA

Minimum order now only £10

All prices in £ Stg

Free 430+ page Catalogue

Jaycar Electronics

www.jaycarelectronics.co.uk

BitScope USB Mixed Signal Oscilloscope

Analog + Digital

Digital Storage Oscilloscope
- Dual Channel Digital Scope with industry standard probes or POD connected analog inputs. Fully opto-isolated.

Mixed Signal Oscilloscope
- Capture and display analog and logic signals together with sophisticated cross-triggers for precise analog/logic timing.

Multi-Band Spectrum Analyzer
- Display analog waveforms and their spectra simultaneously. Base-band or RF displays with variable bandwidth control.

Multi-Channel Logic Analyzer
- Eight logic/trigger channels with event capture to 25nS.

DSP Waveform Generator
- Built-in flash programmable DSP based function generator. Operates concurrently with waveform and logic capture.

Mixed Signal Data Recorder
- Record to disk anything BitScope can capture. Supports on-screen waveform replay and export.

User Programmable Tools and Drivers
- Use supplied drivers and interfaces to build custom test and measurement and data acquisition solutions.

Inventing the future requires a lot of test gear...

...or a BitScope

NEW MODEL

BS100U Mixed Signal Storage Scope & Analyzer

Innovations in modern electronics engineering are leading the new wave of inventions that promise clean and energy efficient technologies that will change the way we live.

It's a sophisticated world mixing digital logic, complex analog signals and high speed events. To make sense of it all you need to see exactly what's going on in real-time.

BS100U combines analog and digital capture and analysis in one cost effective test and measurement package to give you the tools you need to navigate this exciting new frontier.

Standard 1M/20pF BNC inputs

Smart POD Connector

Opto-isolated USB 2.0

12VDC with low power modes

BitScope DSO Software for Windows and Linux

BS100U includes BitScope DSO the fast and intuitive multichannel test and measurement software for your PC or notebook.

Capture deep buffer one-shots, display waveforms and spectra real-time or capture mixed signal data to disk. Comprehensive integration means you can view analog and logic signals in many different ways all at the click of a button.

The software may also be used stand-alone to share data with colleagues, students or customers.

Waveforms may be exported as portable image files or live captures replayed on another PC as if a BS100U was locally connected.

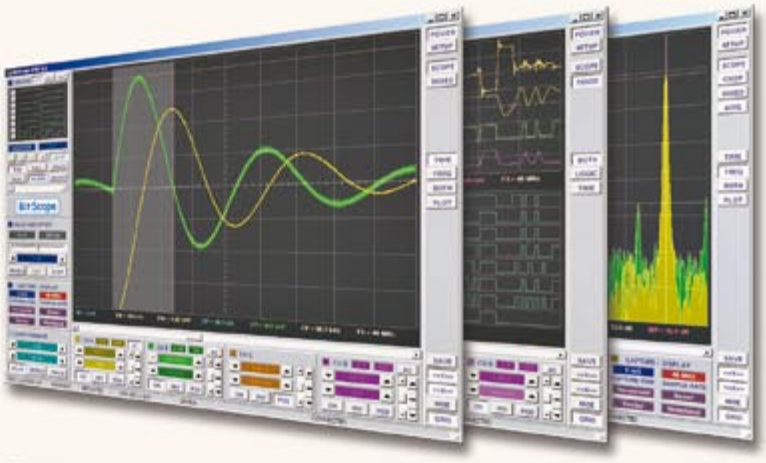

www.bitscope.com

elektor electronics
leading the way

1 + 1 +1 +1 + Elektor = 150,000

With this edition we're proud to present, for the first time in the history of Elektor, a ready-assembled circuit board secured on the front cover of the magazine; for all language editions distributed across the globe, including, as of this month, Spanish! The board is not an existing commercial product — it was custom made for Elektor. About a year ago it struck us that the PREMA PR4401 chip would be great for a LED driver board to give away to our readers. We told PREMA representatives of our idea at the 'electronica' exhibition in November 2006. Not without success as a few weeks later PREMA promised us 150,000 ICs. For the inductor in the circuit, we secured the equally kind cooperation of Würth Electronic. After extensive research at PREMA the optimum SMD case and inductance were established, while the PCB design came from the Elektor labs. All we needed at that point were companies to manufacture and stuff the PCB. No problem if you disregard the hard fact that PCB manufacturers these days are fully booked and the cost of 150,000 pieces of the board we had in mind is about as much as we spent on building four new websites (see p. 18). The solution to the problem was found on an electronics trade shown in the Netherlands, where an Elektor-designed all-SMD WiFi Sniffer board was produced 'live' using a dozen or so high-end machines and other specialised equipment from different companies. About 2,500 of these boards were successfully produced in one day and given away to visitors to the show. The resounding success enabled us to find in Eurocircuits (the guys running The PCBShop) a 'cost-sharing partner' for the LED driver board. Too late, we thought, for our September 2007 issue. But then Würth and ECS seemed to bend over backwards in respect of component supply and manufacturing times and we received confirmation — literally when these words are written — that 150,000 populated PCBs were ready for transporting to our magazine binders. I hope you have your PR4401 LED driver on your desk as you read this.

Jan Buiting
Editor

PR4401 LED Driver 32

18 The new Elektor website

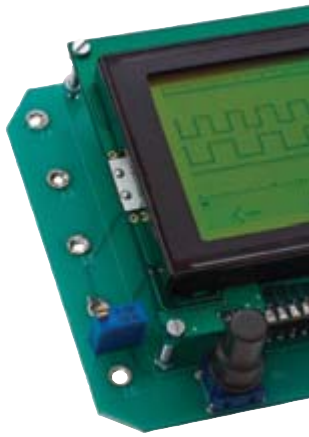

22 Good and Occasionally Favourable

You might think that amplifiers are like sand on the beach. But if you restrict your search for fully assembled amplifier modules to hi-fi applications and omit modules for other applications, the range of available products shrinks quite quickly. For this test, we selected eleven different modules from various manufacturers, with an output power range extending up to nearly half a kilowatt.

CONTENTS

Volume 33
September 2007
no. 369

In conjunction with PREMA Semiconductor and Würth Electronics (who provided the components), Eurocircuits and ECS Electronics (who manufactured and populated the printed circuit board), Elektor is pleased and proud to include a free gift with this issue: a board containing an LED booster circuit which you can try out for yourself.

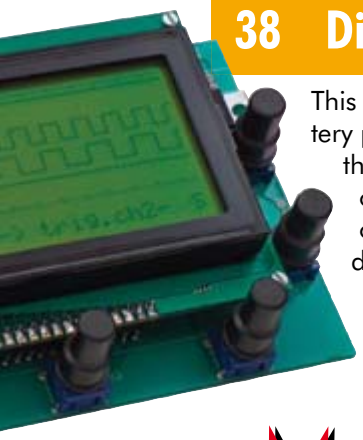

38 Digital Inspector

This four-channel logic analyser is compact and can be battery powered. The maximum sampling rate is 2 MHz and the circuit has sufficient memory to store 1024 samples of the signal. The dot-matrix display with a resolution of 64 by 128 pixels shows a clear representation of the digital signals.

National Instruments/ Elektor Seminar

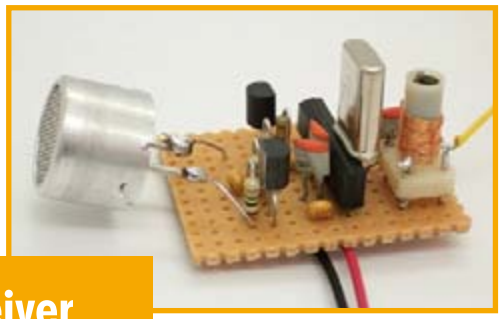

46 Ultrasound Receiver

Using a balanced mixer, we can make an ultrasound receiver that allows us to hear bat sounds. The Software Defined Radio (SDR) previously described in Elektor Electronics May 2007 makes an ideal starting point.

projects

38 Digital Inspector
42 Tilt Gamepad
46 Ultrasound Receiver
50 SDR and VLF
58 FM Superregenerative Receiver
65 The Anatomy of Hex Files
66 Watchdog in the Meter Cabinet
80 Automating the R8C Starter Kit
72 Profiler Tips & Tricks
74 Design Tip

technology

32 PR4401 LED Driver
62 Waiting for Zigbee

info & market

6 Colophon
7 Hands-on Seminar
8 Mailbox
12 News & New Products
16 Adding Security to Removable Mass Storage Media
18 Elektor's New Website
22 Good and Occasionally Favourable
54 Racing under the Sun
81 Elektor SHOP
84 Sneak Preview

infotainment

76 Hexadoku
77 Philips '60'-series NORbits (1968)

elektor electronics

Volume 33, Number 369, September 2007 ISSN 0268/4519

Elektor Electronics aims at inspiring people to master electronics at any personal level by presenting construction projects and spotting developments in electronics and information technology.

Publishers: Elektor Electronics (Publishing), Regus Brentford, 1000 Great West Road, Brentford TW8 9HH, England. Tel. (+44) 208 261 4509, fax: (+44) 208 261 4447 www.elektor.com

The magazine is available from newsagents, bookshops and electronics retail outlets, or on subscription. *Elektor Electronics* is published 11 times a year with a double issue for July & August.

Under the name *Elektor* and *Elektuur*, the magazine is also published in French, Spanish, German and Dutch. Together with franchised editions the magazine is on circulation in more than 50 countries.

International Editor: Mat Heffels (m.heffels@segment.nl), Wisse Hettinga (w.hettinga@segment.nl)

Editor: Jan Buiting (editor@elektor.com)

International editorial staff: Harry Baggen, Thijs Beckers, Ernst Krempelsauer, Jens Nickel, Guy Raedersdorf.

Design staff: Antoine Authier, Ton Giesberts, Paul Goossens, Luc Lemmens, Jan Visser, Christian Vossen

Editorial secretariat: Hedwig Hennekens (secretariaat@segment.nl)

Graphic design / DTP: Giel Dols, Mart Schroijen

Managing Director / Publisher: Paul Snakkers

Marketing: Carlo van Nistelrooy

Customer Services: Anouska van Ginkel

Subscriptions: Elektor Electronics (Publishing), Regus Brentford, 1000 Great West Road, Brentford TW8 9HH, England. Tel. (+44) 208 261 4509, fax: (+44) 208 261 4447 Internet: www.elektor.com Email: subscriptions@elektor.com Rates and terms are given on the Subscription Order Form

Head Office: Segment b.v. P.O. Box 75 NL-6190-AB Beek The Netherlands Telephone: (+31) 46 4389444, Fax: (+31) 46 4370161

Distribution: Seymour, 2 East Poultry Street, London EC1A, England Telephone: +44 207 429 4073

UK Advertising: Huson International Media, Cambridge House, Gogmore Lane, Chertsey, Surrey KT16 9AP, England. Telephone: +44 1932 564999, Fax: +44 1932 564998 Email: p.brady@husonmedia.com Internet: www.husonmedia.com Advertising rates and terms available on request.

International Advertising: Frank van de Raadt, address as Head Office Email: advertenties@elektuur.nl Advertising rates and terms available on request.

Copyright Notice

The circuits described in this magazine are for domestic use only. All drawings, photographs, printed circuit board layouts, programmed integrated circuits, disks, CD-ROMs, software carriers and article texts published in our books and magazines (other than third-party advertisements) are copyright Segment. b.v. and may not be reproduced or transmitted in any form or by any means, including photocopying, scanning an recording, in whole or in part without prior written permission from the Publishers. Such written permission must also be obtained before any part of this publication is stored in a retrieval system of any nature. Patent protection may exist in respect of circuits, devices, components etc. described in this magazine. The Publisher does not accept responsibility for failing to identify such patent(s) or other protection. The submission of designs or articles implies permission to the Publishers to alter the text and design, and to use the contents in other Segment publications and activities. The Publishers cannot guarantee to return any material submitted to them.

Disclaimer

Prices and descriptions of publication-related items subject to change. Errors and omissions excluded.

© Elektor International Media B.V. 2007 Printed in the Netherlands

Advertisement

Your price conscious PCB supplier

EURO CIRCUITS

Online price calculation
Online ordering
Online order tracking
Online 24/24H and 7/7D

Interested? Contact us: +44 2088 167 005
E-mail: euro@eurocircuits.com
www.eurocircuits.com

Verified
- pooling for standard boards
- up to 6 layers
- from 1 to 1000 pieces
- from 3 working days onwards

A la carte
- pooling with more options
- up to 8 layers
- from 1 to 1000 pieces
- from 3 working days onwards

On demand
- your board, our challenge
- up to 16 layers
- from 1 piece onwards
- from 3 working days onwards

All Major Credit Cards Accepted!

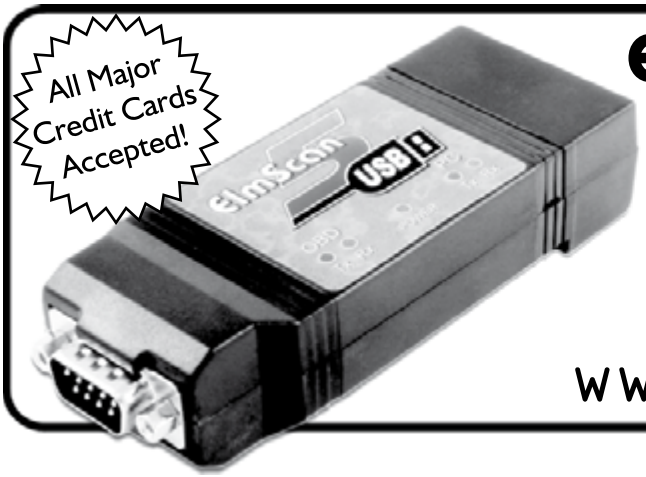

ElmScan 5 USB Scan Tool

- Diagnose any car with EOBD
- Based on the ELM327 IC
- Supports all EOBD and OBD-II protocols
  - ✓ *ISO15765-4 (CAN)*
  - ✓ *ISO14230-4 (Keyword 2000)*
  - ✓ *ISO9141-2*
  - ✓ *J1850 VPW*
  - ✓ *J1850 PWM*
- 9600 or 38400 baud
- Supported by more software than any other OBD interface
- Inexpensive
- Full Speed USB 1.1
- Automatic protocol detection
- Package includes cables, software CD, and Quick Start Guide
- Buy from your local UK distributors!

www.ElmScan5.com/elektor

Hands-on Seminar Jointly organised by Elektor Electronics and National Instruments Electronics Workbench Group

In cooperation with National Instruments Electronics Workbench Group, *Elektor Electronics* is organising a hands-on seminar for its readers, to be held on 27 September 2007. This seminar will focus on using Multisim 10 to design, simulate and measure electronic circuits. Participants will be given ample opportunity to obtain personal experience with using these techniques on a PC.
At this seminar, several specialists from National Instruments Electronics Workbench Group will show you how simulation and virtual instruments can assist you in the design process and enable you to reduce development time. Application of SPICE models and advanced analysis methods such as Monte Carlo analysis are also on the agenda. All of this will be illustrated using the versatile Multisim 10 program.
The seminar will also feature several demonstrations of National Instruments instrumentation products to show how they can be used to make measurements on circuits and how to set up measurement procedures.
Several computers will be available at the seminar so participants can try out all of this 'hands-on'.

Topics

The following topics will be addressed during the seminar:
- Introduction to SPICE modelling in Multisim for developing schematics;
- Using LabVIEW and virtual instrumentation to create interactive simulations;
- Entering real stimulus data for use in simulations;
- Various types of analysis (AC, DC, Monte Carlo, etc.);
- Design verification of prototypes, in which simulation results are fed into real circuits;
- Using Ultiboard to design PCB layouts;
- Using LabVIEW and NI instrumentation hardware to set up hybrid prototyping systems;
- Using NI Educational Laboratory Virtual Instrumentation Suite (ELVIS) to create a circuit and link it to a PC.

Registration

If you're interested in attending the seminar, you can sign up by completing the registration form found on the *Elektor Electronics* website (www.elektor.com).

The number of seminar participants is limited to 30.

If more than 30 people sign up for the seminar, participants will be selected by *Elektor Electronics*. No correspondence will be conducted in this regard.

Seminar participation is free of charge for readers of *Elektor Electronics* who are professionally involved in designing and developing electronic circuits.

The hands-on seminar will be held on 27 September 2007 at the National Instruments Office in Newbury, Berkshire.

A route description for travel by car or public transport will be sent to the participants in good time.

(070492-I)

Programme

8.30–9.00 Reception and registration of participants
9.30 Start of the morning session
12.30 Catered lunch
13.15–15.15 Afternoon session
15.30 Informal discussion with NIEWG specialists

Advertisement

Electronics Engineers - Join A Winning Team!
UK and Czech Republic

LeKtroniX

We are looking for Engineers for the United Kingdom & Czech Republic.

The Lektronix Group of Companies are the worlds leading provider of Industrial Automation repairs with an enviable reputation for the best in technical excellence and customer service.

Due to the huge demand for our services we need to employ additional engineers at our three UK workshops (West Midlands, South Wales and Northern Ireland) to keep pace with the work we are receiving.

Also, due to future expansion throughout Europe we are looking for English speaking engineers to train and work in the UK with eventual relocation to our workshop in Brno, Czech Republic.

We are looking for Electronic Repair Engineers, Electronic Repair Technicians and Electronic Component Level Repair Engineers.

Do you have an interest in electronics?
Have you any experience in the field of practical electronics?
Have you experience in Radio/Television/Home Electronics?
Does your hobby/interest include electronics?
Are you willing to learn new tricks – electronic engineering?
Do you want work in an exciting and challenging environment?
Do you have any experience with Machine Tool Systems - PLC's - Servo Drives - Servo Motors - Monitors-VDU's - AC Drives - DC Drives - Temperature Control - Digital Electronics – Analogue Electronics?

We offer a competitive salary and all the other benefits normal with a go ahead company.

Please Contact: Mr Brian Stewart
Lektronix Ltd, Unit C1, Anchor Brook Ind Park, Wharf Approach, Aldridge, West Midlands, WS9 8EQ, United Kingdom.

Telephone +44 (0)1922 455555 for an application form or apply on line at www.lektronix.net

Solution to Hexadoku May 2007

5	4	C	2	1	B	7	8	9	E	0	D	3	6	F	A
A	6	E	B	C	F	9	4	3	1	2	5	8	0	D	7
9	1	8	7	D	2	0	3	6	C	A	F	4	E	B	5
3	D	0	F	6	A	E	5	7	B	8	4	2	9	1	C
8	3	9	5	F	C	6	1	2	4	D	0	B	A	7	E
C	B	A	4	0	7	8	D	F	3	6	E	1	5	9	2
D	7	1	6	E	9	5	2	A	8	B	C	F	3	4	0
F	E	2	0	4	3	A	B	5	7	1	9	6	D	C	8
B	9	6	A	7	0	F	C	4	D	3	2	5	8	E	1
7	2	D	C	5	8	3	9	E	A	F	1	0	4	6	B
0	5	4	8	A	1	D	E	B	6	C	7	9	2	3	F
E	F	3	1	2	4	B	6	0	9	5	8	7	C	A	D
4	C	F	D	B	E	2	7	8	5	9	6	A	1	0	3
2	A	B	9	8	6	1	0	D	F	E	3	C	7	5	4
6	8	7	E	3	5	C	F	1	0	4	A	D	B	2	9
1	0	5	3	9	D	4	A	C	2	7	B	E	F	8	6

Solution to Hexadoku June 2007

A	F	E	5	2	4	0	B	9	D	7	8	C	3	1	6
6	C	B	3	7	D	A	9	5	0	4	1	8	E	2	F
0	9	8	D	C	1	5	F	6	3	E	2	B	A	7	4
4	7	2	1	8	6	E	3	F	C	A	B	9	0	D	5
F	6	4	0	A	C	D	7	B	5	1	9	2	8	E	3
7	D	9	E	B	8	F	1	2	4	3	6	0	5	A	C
1	B	A	8	5	3	2	0	E	F	C	D	6	4	9	7
5	3	C	2	E	9	4	6	8	7	0	A	F	D	B	1
E	5	1	9	4	7	8	C	A	6	2	0	3	B	F	D
8	A	D	7	9	F	3	E	C	1	B	4	5	6	0	2
3	2	6	F	0	5	B	A	D	9	8	7	1	C	4	E
B	4	0	C	1	2	6	D	3	E	5	F	A	7	8	9
C	8	7	6	D	A	1	4	0	2	F	5	E	9	3	B
9	1	F	4	3	B	C	8	7	A	6	E	D	2	5	0
2	0	3	B	F	E	9	5	4	8	D	C	7	1	6	A
D	E	5	A	6	0	7	2	1	B	9	3	4	F	C	8

Crypto Puzzle winners

The Crypto Puzzle published in the March 2007 issue of Elektor Electronics as part of the Microchip/Labcenter Explorer-16 article series has drawn a good response from our international readership. In fact, the number of correct entries received was such that there was no need for the authors to post clues in instalment 4 or the Explorer-16 forum on the Elektor website as originally planned.

To compensate initial problems with the 'secret' email address resolved from the puzzle, the competition rules were changed from 'the first three correct entries for each Elektor national edition are winners' to: '12 winners drawn at random from all entries received'. One method of solving the puzzle was described in Part 4 of the Explorer-16 article series.

All participants received a free Microchip pen and wallet. The winners received an ICD-2 debugger kit from Microchip and a copy of Proteus VSM for the PIC24FJ128GA010. Congratulations to all!

United Kingdom
John Tuckett (Cleveland); Colin Wilkinson (Wareham)

Germany
Christian Heiland (Olbersdorf); Marc Neujahr (Lahstedt/Münstedt)

Belgium
Christophe Kaut (Burg-Reuland); Simon Saenen (Holsbeek); Hans Ameel (Kortrijk)

France
Sébastien Larcher (Carcassonne); Frédéric Linard (Mézières sur Seine)

Denmark
Klaus Klug Christiansen (Kokkedal)

Netherlands
Marco van Nieuwenhoven (Eindhoven); Dennis Vermoen (Capelle aan den Ijssel)

Freescale samples (2) (they came from afar...)

I was just wondering whether anyone else had tracked their order of Freescale microcontrollers (ref. 'g-Force on LEDs', EE April 2007, Ed.) and if so if theirs had travelled as far as mine? I have posted the route, plotted on Google Earth, they took on my blog (http://britishengineeringsystems.com/2007/03/21/what-a-long-way-for-free/) for anyone who wants to see the 5,000+ mile trip. As someone has already asked, what is the carbon foot print of these? (according to the box they were made in China too!)
'binraker' (on EE forum)

Microwave ovens and SMD

Dear Editor — I do not own and have never used a microwave oven for cooking food. However, as a result of technical progress in electronics (SMD use) I feel forced to consider the purchase of a unit. My local MIGROS store have an offer of a 1000W Mio Star MWG 8000 21 litre microwave oven with 5 power steps between 80 W and 800 W. Included is a 27cm

dia turntable and a grill unit. I understand that you are going to update your article on 'Electronic Cooking' ('SMD Reflow Oven', January 2006, Ed.) and I would like to know if the unit which I have described could be used as an SMD tool? As I am unlikely to use the unit for cooking food and I would have no other application for it I decided not to purchase it until I had some guidance from EE. Unfortunately, the store would not allow me to examine the contents of the carton so I am unable to describe the circuit board but I do know that the whole unit complies with the Swiss safety standards.
By the way, when is the next article on SMD frying?
David Stafford (by email)

Give that Mio Star a miss, David, and look out for an oven with a grill only. Even a 'student edition' the size of a large toaster will work better. Most combined microwave / grill ovens have poor temperature control of the electrical heater elements used for baking and grilling. The updated SMD Oven article is in the pipeline and will appear later this year. In it we will recommend a suitable low-cost oven.

New lithium batteries

Dear Editor — I cannot entirely understand the sense of euphoria radiated by the 'Tough and Powerful' article in the April 2007 issue of Elektor Electronics.
The main advantage of LiPo cells, which is their low self-discharge rate, is matched by modern NiMH cells such as Eneloop and Ready4you from Sanyo and Varta. For equipment that uses AAA or AA cells, this makes them considerably more attractive in terms of price, compatibility and availably than lithium batteries, which are expensive and not readily available. NiMH batteries can even be used to replace primary batteries in watches and IR remote controls, and the Eneloops also score bonus points with an improved voltage level.
Hans-Konrad Unger (Germany)

Ernst Krempelsauer, the article editor, replies: The lithium cells with nanophosphate cathodes described in the article are intended to be used in a completely different application area than the NiMH cells you mention, which we have also described in an article (see inset). They are not standard equipment batteries, but instead distinctly high-performance, high-current batteries intended for the applications mentioned in the article, such as power tools, hybrid cars, electric airplanes, electric bicycles, etc.
We certainly did not intend to create the impression that these batteries would be advantageous for normal consumer applications, and in any case this would be excluded by their construction and voltage level. The 'improved voltage level' is only claimed by Sanyo (for Eneloop), and even there the 'improvement' in the average full-discharge voltage is only slightly less than 50 mV (0.05 V).

Mains filter for audio

Dear Jan — in the specialist press, you hear a lot about mains filters that are supposed to extract the last ounce of refinement from high-end audio equipment. Specialist suppliers then respond by placing ads for sinfully expensive outlet strips. Is this all simply hocus-pocus? Since I've started to hear stories of this sort from people in my circle of acquaintances, I wonder whether there's actually something to it. I thus have this question for you: wouldn't a filtered outlet strip of this sort be a worthwhile DIY project for a

Fairchild Anniversary Quiz winners

In the May 2007 issue of Elektor we reported on the double anniversary of semiconductor pioneers Fairchild, celebrating their founding 50 years ago and, in the same year (2007), having been an independent company again for the last 10 years. To celebrate the double anniversary, Fairchild and Elektor published a quiz with 10 power inverter/motor driver kits and associated asynchronous motors as prizes, worth £ 200 each.
The quiz questions were not too difficult, it turned out as over 300 correct answers were received. The correct answers are shown in brackets.

1. Who developed the planar transistor at Fairchild in 1958?
   (Jean Hoerni).
2. How many integrated components comprise and IGBT?
   (2)
3. What is the phase angle between any two of the 3-phase outputs of a frequency inverter?
   (120)

The lucky winners drawn at random are:

Harry Coolen (Weert, NL); Sanitate Donato (Ars sur Moselle, F); Christian Fasthuber (Wels, A); Michael Greiff (Dresden, G), Leslie Hadden (Ballygawley, UK), Pierre Lefebvre (Morlanwelz, B), Erich Lienhart (Bühl, G); Viktor Riediger (Bielefeld, G); Ko Visser (Nijverdal, NL); Manfred Weder (Halle, G).

Congratulations to all winners and thanks to all who have participated!

Corrections & Updates

Satnav for Robots **July/August 2007, p. 78-80, ref. 070350-I**

The circuit diagram in Figure 1 was erroneously shifted out of its box. The correct rendering is shown here.

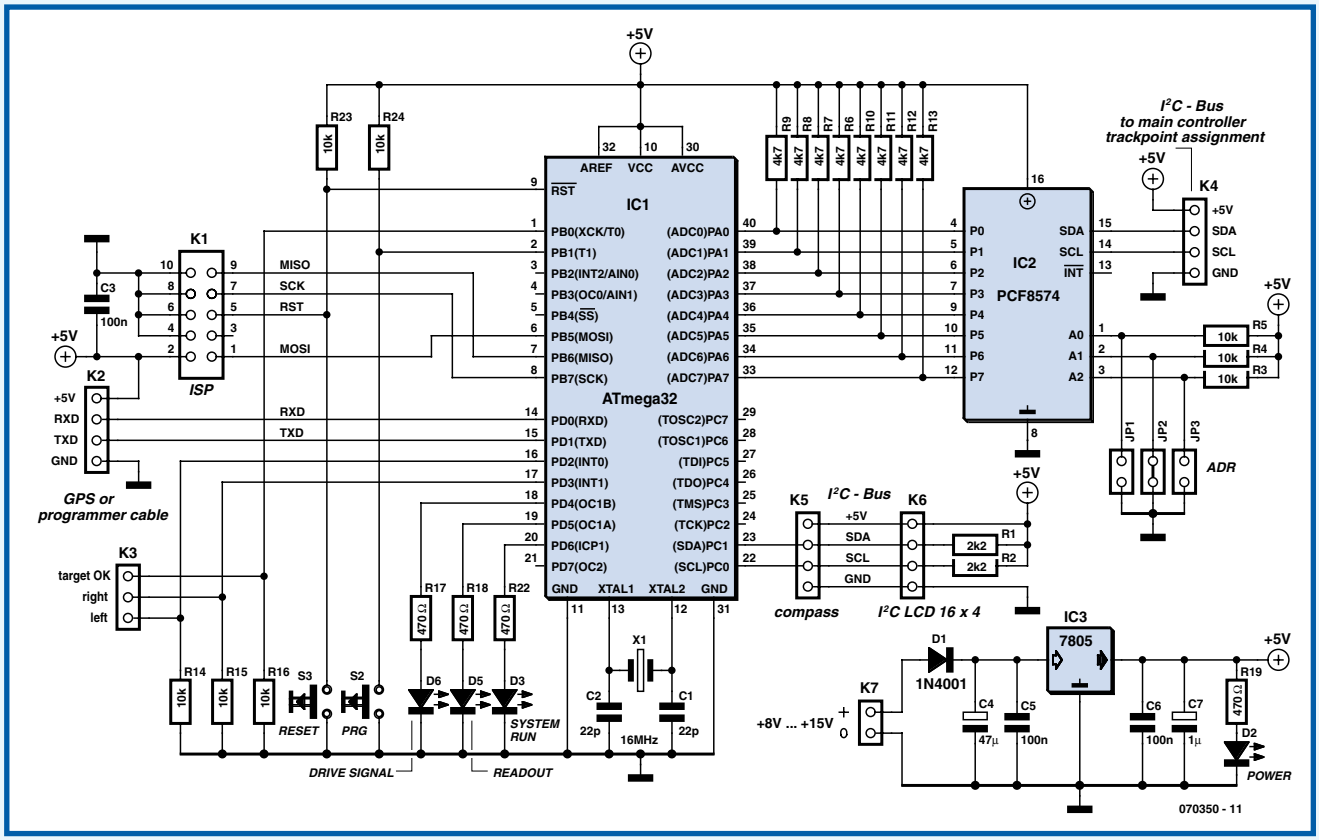

lot of readers? In contrast to ready-made products, you could adapt it to your specific situation and needs (such as building it into a home-built rack), and you could save couple of quid at the same time. A unit dimensioned for 1 kW or so, with supplementary filtering for digital equipment, would probably suit most users. I already suspect that even the slick ready-made products are built using only standard parts, so the material should be available. This also reminds me of the Class D final amplifier design you published. However, I cannot judge whether the filter board for this amplifier would fulfil this purpose. What do you think about this?

G. Barth (Netherlands)

This is an interesting question. On the one hand, we have long since stopped devoting any attention to discussions of how different types of copper alloy affect the sound of a system. This also applies in principle to the system performance enhancements attributed to mains filters, regardless of whether they are built using standard components or electronic dowsing rods.

On the other hand, a 'clean' power source is certainly not a bad idea, and it can at least improve the signal to noise ratio. And considering that our mains networks are becoming dirtier all the time (with a wealth of interference), the utility of a mains filter cannot be entirely denied. We are already tossing around some ideas for a project in the Elektor Electronics lab.

A tile saw comes in handy

Dear Editor — I would like to briefly share some experience with sawing PCBs. If you start making them on your own again, it's always difficult to get the board dimensions

right. Of course, an sheet metal shear is quite handy for this, but if you don't have one you have to use a saw. Cutting PCBs with a hacksaw is actually not all that bad, but if you have to saw quite a few boards it's easier to use a power tool. Although a tile cutting saw is probably not something that most people have lying around, it makes cutting boards very easy. It's probably not the first thing you would think of, but it works very well. After a bit of touching up with a belt sander, you're all set to go, Mac.

Mac (by email)

Thanks a lot for this handy tip. We're sure that other readers will want to give this a try. But we do hope that they are careful, since it's quite easy to cut off a finger too!

MailBox Terms

- Publication of reader's correspondence is at the discretion of the Editor.
- Viewpoints expressed by correspondents are not necessarily those of the Editor or Publisher.
- Correspondence may be translated or edited for length, clarity and style.
- When replying to Mailbox correspondence, please quote Issue number.
- Please send your MailBox correspondence to:

editor@elektor-electronics.co.uk or
Elektor Electronics, The Editor,
1000 Great West Road,
Brentford TW8 9HH, England.

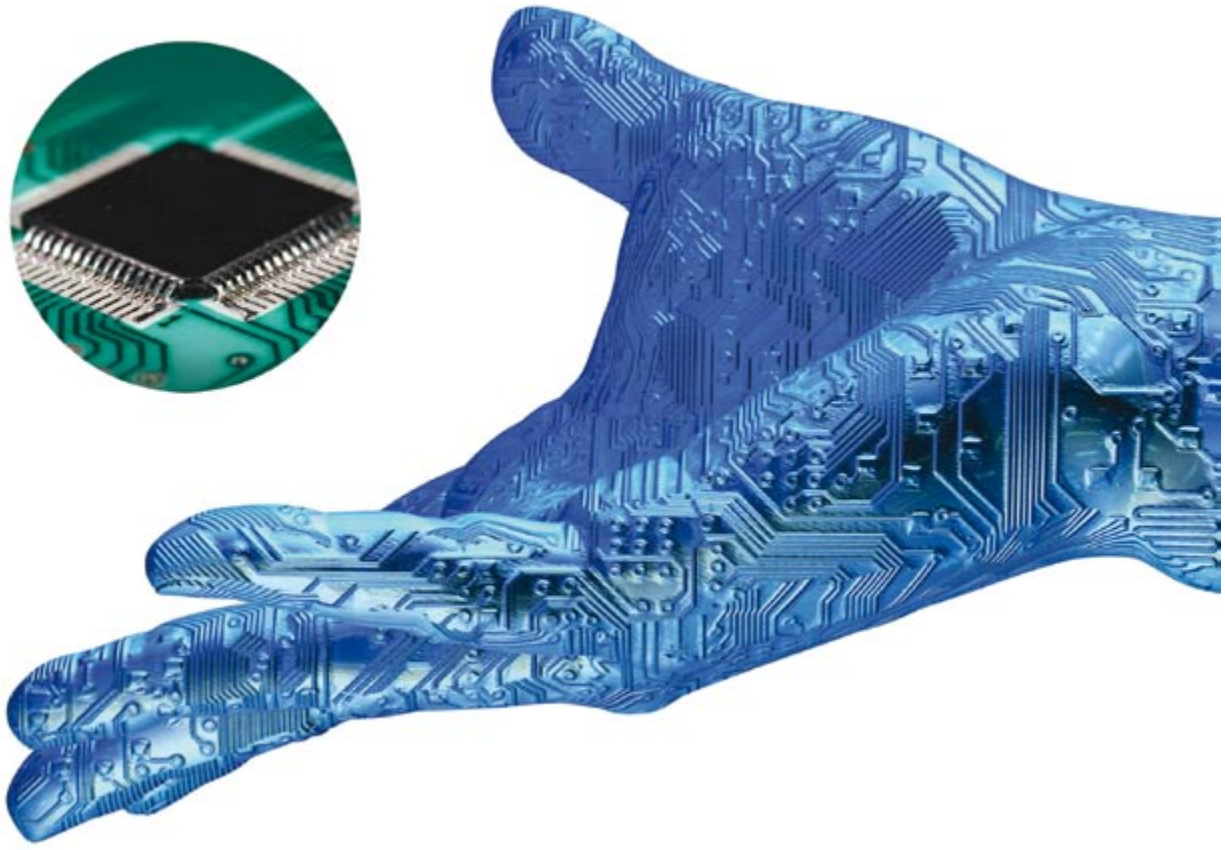

Does your company spend too much time, money and effort developing and testing embedded systems?

Would you like to have access to an integrated suite of cost-effective tools which support the rapid development and testing of reliable embedded systems using off-the-shelf processors with an ARM™ core?

Would you like to be able to use the same tool set with a range of FPGA platforms, using "soft core" processors?

Have you tried RapidiTTy ?

info@tte-systems.com

www.tte-systems.com

TTE Systems

Rapid development of reliable embedded systems

30-day free trial now available - please visit www.tte-systems.com

Lascar move to new offices in Hong Kong

Lascar Electronics' Hong Kong subsidiary have moved to new premises within the city to facilitate the continued expansion of the company's Far Eastern operation.

Lascar (HK) Ltd. is vital in the delivery and success of the custom design & manufacture service offered by Lascar in the UK. This service provides a route to Far Eastern manufacturing for European companies, bringing together the best in UK design and sourcing, kitting and manufacturing in the world's most important growth market.
The new 2950 sq ft. offices are located in the Futura Plaza building in Kowloon at the heart of Hong Kong's business area.

www.lascar.co.uk

(070321-2)

BitScope BS100U USB Mixed Signal Scope and Waveform Generator

BS100U is the newest member of BitScope's popular family of PC based mixed signal oscilloscopes. Like all BitScopes, it has an analogue input bandwidth of 100 MHz and supports real-time simultaneous analog and logic capture to 40 MS/s.
Unique to BS100U is its opto-isolation decoupling it from the PC. You can ground reference it independently and USB drop-outs due to ground-loops or glitches when looking at high power electrical or automotive systems are never a problem.
Another feature to make its debut in BS100U is a powerful DSP based flash programmable waveform generator. Operating independently of the scope's capture engine it allows complex waveforms to be synthesised concurrently with waveform capture.

BS100U has 4 inputs feeding 2 analogue channels plus 8 concurrent logic channels, a ±5 V adjustable external trigger input, a calibration output, and low power modes for extended use on battery power in the field.
The premium BitScope DSO software package is included with BS100U for a complete set of integrated virtual instruments on Windows or Linux PCs. Standard functions include mixed signal and digital storage scopes, a logic analyzer, baseband spectrum analyzer, X-Y phase plotter and an integrated data recorder.

With BS100U the DSO introduces 2 GS/s equivalent time sampling with phase coherent full speed dual channel capture for HF eye diagrams, ISI and modulation analysis, a multi-band spectrum analyzer for RF and narrow-band signal analysis and sophisticated transfer function analysis applications using the built-in waveform generator.

BS100U is also well suited to many data acquisition applications with the inclusion of a DSO based transient recorder as well as drivers for use with third party software tools such as Microsoft Excel, Mathworks MatLab and National Instruments LabVIEW. Open source software solutions are also available and the external trigger and POD based connectivity supports the construction of multi-scope data acquisition systems.

To meet specialised needs the programming API is published to support the development of custom applications and the BS100U POD interface provides full access to the analog and logic signals as well as data, control and power lines making the development of new BS100U powered POD devices easy.

(070490-I)

BitScope Designs, Suite 3, 28 Chandos St., St. Leonards, NSW 2065, Australia. Tel: +61 2 9436 2955; fax: +61 2 9436 3764.
www.bitscope.com

High performance register supporting ddr3 memory modules

IDT™ (Integrated Device Technology, Inc.) announces the industry's fastest JEDEC-compatible integrated register and phase-locked loop (PLL) for DDR3 registered dual in-line memory modules (RDIMMs). The device's integrated PLL supports the industry's widest range of operating clock speeds, from DDR3-800 to DDR3-1600 with a propagation delay of less than 1 nanosecond. Designed for a new generation of high performance servers and workstations, the IDT 74SSTE32882 offers twice the speed of today's DDR2 solution with a 30 percent reduction in power consumption.
The integration of the register and PLL into a single device enables RDIMM vendors to develop a simplified design and board layout. In addition, the 74SSTE32882 supports an internal PLL feedback loop to reduce trace routing and spread spectrum clocking to reduce EMI. The supply voltage for the 74SSTE32882 is reduced to 1.5V, limiting power consumption and heat generation. These features are valuable to RDIMM vendors because they enable significant cost savings through the reduction of board real estate and the elimination of external components.
The IDT 74SSTE32882 is designed to be fully compatible with the most current JEDEC specification. The guideline set by JEDEC ensures interoperability for all JEDEC compatible DDR3 solutions and will help facilitate the growth of the DDR3 market.

www.idt.com

(070321-5)

Infratec SpeedUp Partner Programme

Infratec AG presents its new SpeedUp Partner Programme. Not only does it offer interesting lucrative conditions and services, but above all it offers the SMS Alarm System which controls both PC as well as Server; for instance, in case of damage, an alarm is sent via SMS or via email.

The SpeedUp Partner Programme offers three categories: Partner, Silver Partner and Gold Partner, which do not focus solely on maximising annual turnover on Infratec products. Certification depends essentially on training courses relating to the products. In order to achieve the Silver Partner status, training on the Remote Monitoring System and on Power Monitoring Products is required. The Gold Partner status can be obtained once training on NMS 1000 software for general control is undertaken.
Infratec AG's range of products includes individual components and complete solutions for the range of KVM Switches, KVM Extender, cabinet monitors and even power distribution units and serial console servers. Thus an excellent opportunity in auxiliary business opens up to traders with an expertise in information technology and to system houses.
The SpeedUp Partner Programme offers lucrative conditions: Every new distributor will receive a special bonus of 5% with the first order. The standard margin for a Silver Partner with an annual turnover of 25.000 EUR is 24% while that for a Gold Partner with an annual turnover of € 35,000 is 27%. Another important aspect of the SpeedUp programme: on every total amount of at least 25 units an extra unit is included for free.

With their SMS-Alert Platform and the NMS Line, Infratec offers a tool for the immediate notification not only of server breakdown or damage. With the NMS Line, workstations, server and all other SNMP enabled devices can be controlled. It can also be combined quite easily with all control units and sensors of Infratec's RMS Line. Thus the NMS Line is a powerful software suite which not only alerts immediately in cases of hardware breakdown but also if incidents such as temperature rise, fire, smoke, vibrations, water leakages and unauthorized access occur, simply through an SMS or an email. In developing the NMS Line, it has been ascertained above all that expensive investments such as for an SMS Gateway, could be saved. Instead, the NMS Line accesses the portal www.sms-alert.de which is managed by Infratec, in order to feed the relative information through SMS into any mobile network.

(070490-II)

www.infratec-ag.de

Introduction to Microcontrollers on CD-ROM

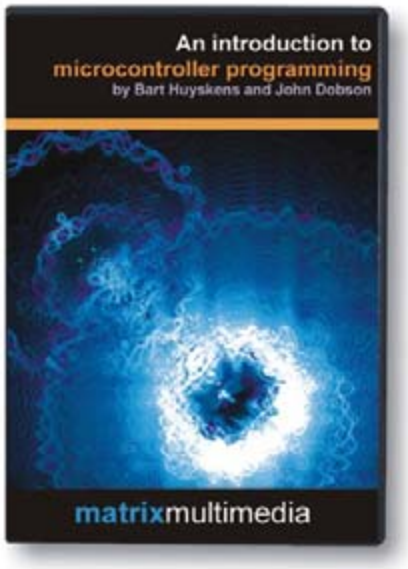

This new course from Matrix Multimedia contains an introduction to microcontroller programming and system development and is suitable for complete novices.
One version of this product is available free of charge online on the Matrix Multimedia website. Students working at home can use this free version – and the free version of Flowcode – to learn about microcontroller development. This free version is not licensed for education use and is missing key items – worksheets and the grading scheme.
'An introduction to microcontroller programming' has a retail price of £ 100 for institutions and this version includes the worksheets and grading scheme. However it is available free of charge to education customers who buy a PICmicro solution based on E-blocks (EB110 or EB215). The new product will also be included in all educational solutions like the E-blocks CAN bus solution, mobile phone solution etc.

(070490-III)

www.matrixmultimedia.com

Advertisement

Slimline hand-held enclosures

The popular 1455 family of extruded aluminium enclosures from Hammond Electronics has been extended with the addition of the A and B sizes, slimline units designed to accept one or two circuit boards respectively, mounted horizontally directly into slots in the walls of the unit.

The rounded profile fits comfortably into the hand or pocket and the units are fitted with plastic bezels at each end that incorporate a flat panel area for switches, indicator lights and other front panel furniture.

The units are available in lengths of 100 mm, the A size is 70 mm wide and the B size is 71.7 mm in width. The 12 mm high A size, which accepts a single PCB, has flat top and bottom surfaces while the 19mm high B size, provided with two PCB mounting slots, has a recessed area, suitable for a membrane keyboard, on one face.

The units are available with a clear or black anodised finish; the end bezels are moulded in black polycarbonate as standard with translucent blue and IR transparent translucent red available as optional alternatives.

(070490-IV)

www.hammondmfg.com

BV511 32 Bit ARM Microcontroller with Operating System

New from ByVac is their easy to use BV511 32 bit microcontroller board for education and real applications. The system comes with full documentation, is easy to start and no external tools are required.
All communication is via the built-in operating system based on Forth. A 100+ page user manual and tutorial shows how to interface a host of devices. User programs can be saved to Flash to produce a standalone system.

BV511 is an upgrade path from 8 bits to 32 bits; this is in fact easier to use than most 8-bit microcontrollers and much more powerful, yet small enough to be built into user applications. The possibilities are endless, from driving robots, milling machines; making a weather station, controlling heating to experimenting with light and audio. No tools need to be installed on the PC and so this can be programmed and used with any PC, ideal for students, no need to be tied to the computer lab.

The BV511 has a 32-bit ARM LPC2132, real time clock with battery backup; 64 k Flash (OS uses 20k); 16 k RAM; ADC, DAC (10 bit), I2C, SPI, IASI; 2 x 32-bit timers; 2 x UARTs (OS uses 115,200 baud); In-Application Programming (easily upgradeable). The board is powered by USB, with 5-V and 3.3V regulated outputs for external equipment. Processor clock is 60 MHz and size approx. 80mm x 32mm x 14mm high
The kit comprises a Processor, USB Lead, CD-ROM and the Microcontroller Foundation Book.

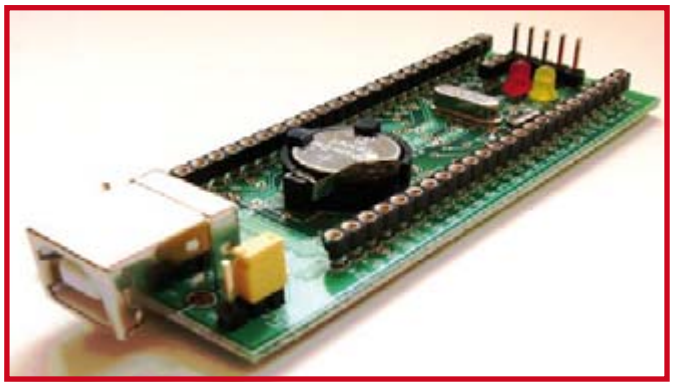

(070490-X)

www.byvac.com

Multicore processor for telematics, consumer and industrial applications

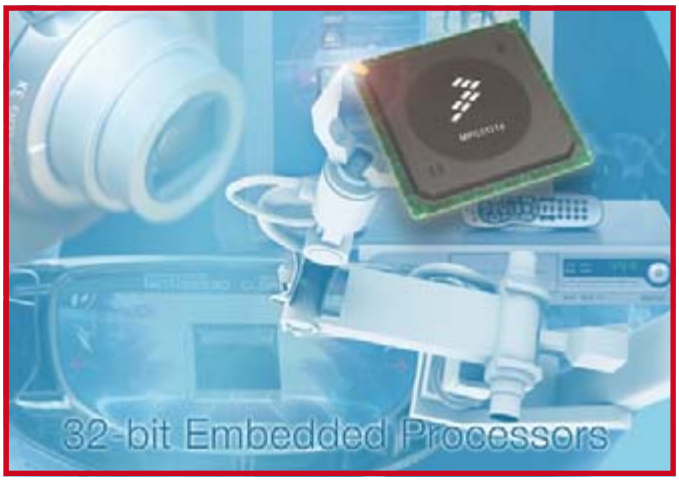

Freescale Semiconductor has introduced a highly integrated system-on-chip (SoC) processor optimized for high-performance, power-sensitive applications requiring complex graphics, multimedia and real-time audio processing.
Built on Power Architecture™ technology, the MPC5121e SoC device is the latest member of Freescale's mobileGT processor family-the most widely used platform solution for telematics. Manufactured on advanced 90 nanometer low-power CMOS technology, the MPC5121e is designed to deliver exceptional multimedia performance and feature-rich user interfaces within a low power envelope, without sacrificing flexibility and robustness.

The primary processing engine of the MPC5121e microprocessor is the e300 core built on Power Architecture technology, scaling to 400 MHz. The MPC5121e combines the e300 core with an integrated 2D/3D graphics core and a fully programmable 32-bit RISC-based multimedia acceleration core optimized for audio processing. Freescale also plans to offer a version of the MPC5121e without the 2D/3D graphics core.

The MPC5121e processor is automotive-qualified, making it ideal for telematics, connectivity and driver interactive vehicle applications. The device meets the reliability requirements of the AEC-Q100 standard and TS14969 specification and is designed to withstand harsh environmental conditions.
In addition to addressing telematics, the MPC5121e device can be used in a broad range of embedded applications, such as networked industrial control and security/surveillance systems, networked patient monitoring systems,

gaming and digital home applications, such as media gateways and set-top boxes.
The MPC5121e processor's high level of on-chip integration helps reduce BOM costs and provides a flexible processing platform for a variety of embedded applications. The device offers a rich set of integrated peripherals, including 10/100 Ethernet, PCI, SATA, PATA, two USB 2.0 On-The-Go (OTG) with an integrated high speed PHY, four CAN modules and 12 programmable serial controllers. The integrated display controller provides cost-effective support for liquid crystal display/thin film transistor (LCD/TFT) displays. The 128 kByte of on-chip SRAM and numerous embedded memory buffers help ensure balanced system performance and system bus throughput while reducing latency demands. Processing performance is enhanced by well balanced system resources for the e300 core, graphics core and multimedia acceleration core, as well as the DDR-I/DDR-II/mobileDDR memory controller with integrated 64-channel DMA support.

For more information about the MPC5121e processor, visit www.freescale.com/files/pr/mpc51xx.html.

(070490-V)

www.freescale.com

MonCon range

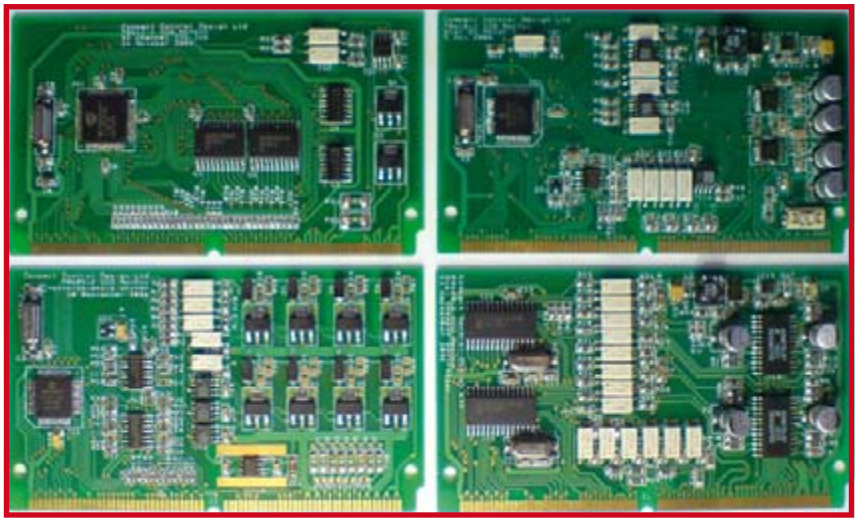

Compact Control Design announces the launch of a product range intended for use in stand-alone and bench-top equipment such as ATE, scientific instruments and production equipment. The range includes boards for controlling/driving motors, valves, solenoids, digital and analogue I/O boards, relay and interface boards. MonCon has been designed for ease of integration especially with wiring loom requirements and can provide a compact, very cost effective and rapid solution. The design enables custom boards to be developed quickly and we can supply complete systems or you can manufacture under license.

(070490-VI)

Compact Control Design, 77 Woolston Avenue, Congleton, Cheshire CW12 3ED. Tel. +44 (0)1260 281694. Web:

High power 500mW narrow-band RF module targets long range applications

Radiocrafts AS, a leading RF module supplier, now expands their product line with a high power narrowband RF module for the European market.
The RC1280HP, offering up to 500 mW output power for increased range, is based on the RC1280 RF Transceiver Module for FSK operation with embedded protocol. When used with quarter-wave antennas a line-of-sight range of 5-6 km can be achieved. The new RC1280HP module uses the same protocol and channels as the RC1280. Interoperation between RC1280 and RC1280HP is therefore possible in a network with both long- and shorter range modules.

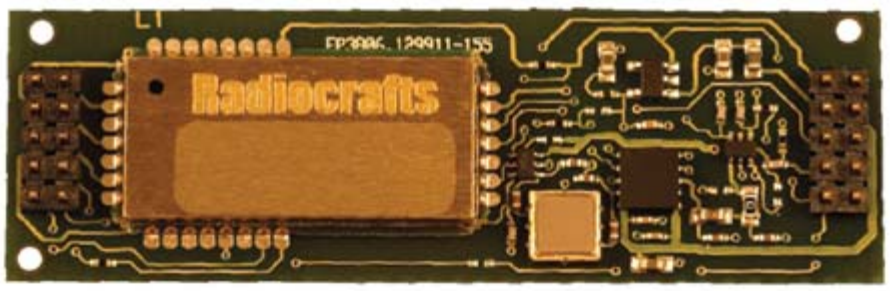

The module is pre-certified and CE marked for operation under the European radio regulations for license-free use in the 868 MHz band, operating in 3 channels in the sub-band at 869.400 – 869.650 MHz. Up to 10% duty-cycle (transmission ratio) is allowed in this band. The new high power module can also be used outside this sub-band if the power amplifier is disabled, reducing the output power to less than 10 mW.

The RC1280HP module contains a multi-channel transceiver with a receiver sensitivity of –108 dBm at 4.8 kbit/s. With 30 dB adjacent channel rejection, 40 dB alternate channel selectivity and outstanding blocking properties, the module offers exceptional performance even in a crowded and noisy environment.
The new module measure only 19.5 x 60.5 x 6.0 mm, and comes in a DIL-style package with 2.00 mm pin pitch made for low profile board-to-board connection. Data buffering, addressing and error check are all handled by the embedded RC232™ protocol. A standard UART serial bus is the interface to the host for both data communication and configuration.
Typical applications include long range telemetry and remote control, automatic meter reading (AMR), fleet and asset management, home-, building- and industrial-automation, wireless security and alarm systems.

(070490-VIII)

www.radiocrafts.com

Adding Security to Ren

Mark Schultz (Applications Engineer Principal; Cypress)

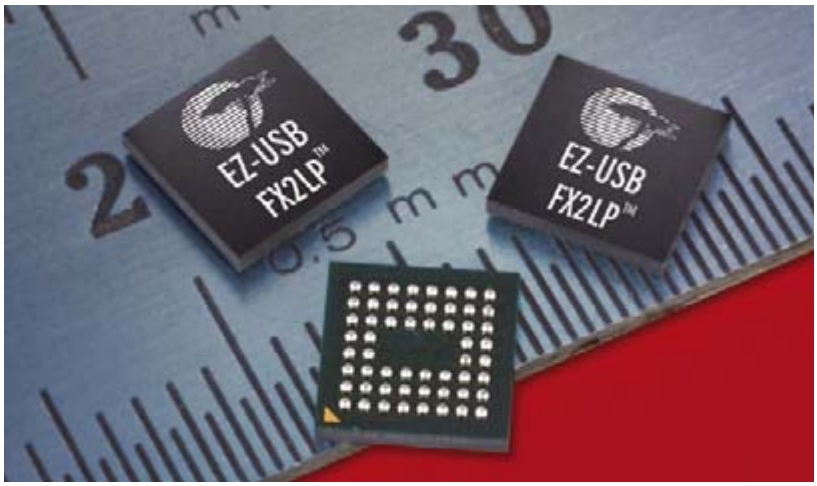

As portable media proliferates into more and more consumer products, data security is becoming increasingly important. New products need to be secure in order to protect confidential information from theft.

Biometric security offers an economical solution that doesn't add significant user burdens such as extra passwords or additional log-in steps. Biometric security methods include fingerprint sensing, retina and iris scanning, signature analysis and hand geometry. Consider the case of fingerprint sensing. With a simple swipe of a finger, a user can authenticate himself to gain access to data on a portable storage device.

Identification and security issues

Identification comes in different forms ranging from passwords to dongles to biometrics. These days, there is a password for everything. Remembering passwords usually involves storing them somewhere, which, in the security sense, is self defeating. Dongles are expensive to manufacture and are prone to being misplaced. Biometric applications need no passwords, require small and relatively inexpensive hardware, and fingerprints are never lost. There are various methods used to keep data secure from an unauthorized user. These include encryption and drive manipulation, among others. Encryption comes in two forms: software and hardware. Hardware encryption adds cost and size to a design. Software encryption is slow when used on larger drives. Drive manipulation involves hardware locking of the drive to prevent access to unauthorized users. One such locking mechanism is ATA Security, a feature available on all new hard drives. Here, a 32-byte password is sent to the drive electronics to put it into 'Secure' mode. After being power cycled, the drive comes up in a locked state until a password is provided. Since only the microcontroller in the enclosure knows the password, moving the drive to an unprotected enclosure won't make the drive readable.

Sensor Types

Some sensor solutions require image processing on the PC while other solutions use a co-processor to process image data. Different sensors also employ differing USB interfaces for getting data back to the PC. Such interfaces include Printer Class, Storage Class and Human Interface Device (HID) Class. There are pros and cons for all three, but they all share the advantage of using only native Windows drivers, making device installation unnecessary. On the hardware side, there are various interfaces ranging from SPI to Parallel bus. The type and speed of interface is related to the method of image processing. The sensor with the co-processor requires only a few hundred kilobits per second while the sensor that uses the PC for image processing requires a 6.5-Megabit per second throughput. The sensor used in the implementation described here is available with either an SPI or a Parallel bus interface.

System Requirements

Removable storage is generally made up of a 2.5" or smaller hard disk drive (HDD), a drive enclosure, power supply and a USB-to-ATA bridge. This solution allows for a very modular design. Adding a fingerprint sensor, as will be seen, is not that difficult. The USB-to-ATA Bridge for this design will be the Cypress EZ-USB FX2-LP. The following section will detail the addition of the Authentec AES2510, a slide type of fingerprint sensor, to an existing USB Mass Storage device. The AES2510 does not have a coprocessor, so the interface between it and the USB controller needs to support data burst rates up to 6.5-Mbps to keep up with the data coming from the sensor during a finger swipe. This isn't a problem since the FX2-LP can already keep up with Hard Drives using UDMA-100 transfer rates. Since image processing will be done on the PC, there will be instances where the USB controller will be required to rapidly switch its interface back and forth between an ATA interface and a fingerprint sensor interface. This is easily accomplished by modifying the FX2-LP's interface on the fly. Following is a block diagram of the USB-to-ATA Bridge with the fingerprint sensor added.

novable Mass Storage

Implementation

For this design, the sensor interface will be added to a standard USB-to-ATA Bridge reference design using the Cypress EZ-USB FX2-LP, see **Figure 1**. The FX2-LP contains a USB 2.0 Serial Interface Engine (SIE), an enhanced 8051 microprocessor and a General Purpose Interface (GPIF). The GPIF is a state-machine based interface capable of data transfers of up to 96 Mbps. The GPIF can be configured for various interfaces including ATA, NAND, Utopia, EPP and Compact Flash. Since the GPIF is a RAM based state machine, multiple sets of control waveforms can be copied in and out, making the GPIF a reconfigurable interface under firmware control. Since the GPIF is directly connected to the FX2-LP's USB FIFOs, there is no need for firmware to do any data manipulation on the sensor data stream.

For this design, the GPIF waveforms will include PIO Read and Write as well as UDMA Read and Writes for the ATA interface. Additional waveforms for reading from and writing to the fingerprint sensor will be added to the project. The firmware for the hard drive functionality will be from the CY4611 Mass Storage reference design. Firmware for the fingerprint sensor will be taken from a code library supplied by the sensor manufacturer.

The AES2510 is available with either an SPI or a parallel bus interface. Since our existing hardware already uses a parallel interface, we have chosen the parallel version of the AES2510. I/O requirements include an 8-bit data bus, plus six control bits - RD, WR, CS, A0, INT and PWR_CTRL. We can share the lower byte of the ATA bus for data if we are careful with the chip select inputs to both the sensor and the ATA bus. For the control and status, we can use Port C of the FX2-LP.

Communication between the sensor and the application software is accomplished via the SCSI Pass Thru interface, an extension to the Windows Mass Storage Driver. Use of SCSI Pass Thru enables the sensor to use the same USB interface as the Mass Storage Device, so no additional device drivers are required for this device.

When a Pass Thru command is received, firmware from the sensor library is used to process the command. The very first thing that the firmware does is to overwrite the GPIF waveform memory, replacing the ATA waveforms with sensor waveforms. Then the firmware acts upon the Pass Thru command performing the required reads and writes to the sensor. When the pass thru cycle is complete, the ATA waveforms are copied back into GPIF memory.

User Interface

A typical secure drive will contain three partitions as shown in **Figure 2**. One partition will contain the Biometric Application Software. This partition will usually emulate a CD-ROM for two reasons:

1. CD-ROM offers a better AutoRun response than a disk drive in Windows;
2. CD-ROM is write protected so the Biometric application cannot be accidentally erased.

One of the two remaining partitions will be for un-secured storage. The user will be able to access this data at any time. The last partition will contain the protected data area. The user will not be able to access the data in this partition without first verifying ownership via his fingerprint.

A biometric application will Auto-Run from the emulated CD-ROM partition on drive start up. The application will process fingerprint image data sent via the Pass Thru interface for the purposes of both user enrollment and user verification. Verification is based on a comparison of the user's swiped fingerprint to their enrolled fingerprint image. Once the user is verified, the public partition will be 'unlocked' and its data will be available to the user. If the drive is disconnected from USB or if power is removed, the protected area will once again become inaccessible to the user.

Cost of components to add the biometric option is under $7.00. Solutions for other media such as NAND-Flash are currently under development.

(070422-I)

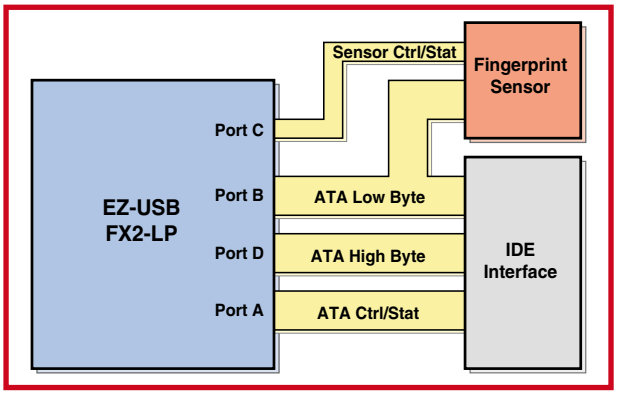

Figure 1. Proposed connection of the EZ-USB FX2-LP unit to its peripherals.

Further information

Cypress EZ-USB FX2-LP: www.cypress.com
AES2510 fingerprint sensor: www.authentec.com

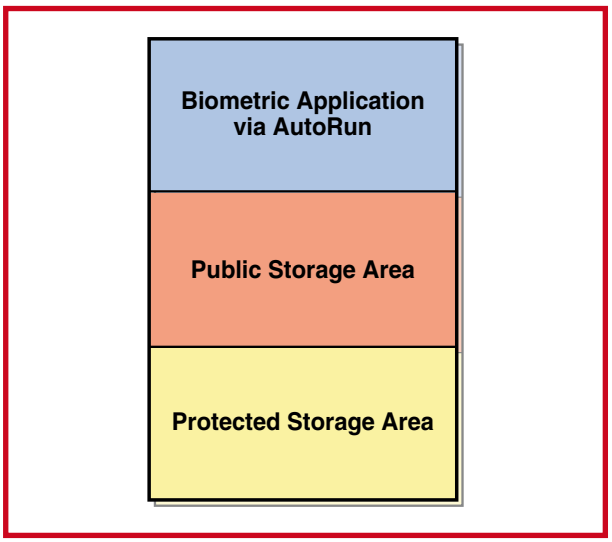

Figure 2. Mapping the available memory.

Elektor's New W

Surfer-readers, our strength lies in your

Denis Meyer (Elektor webteam)

Elektor has spared no effort in bringing its readers a brand new website that's better suited to their needs. And before starting, we collected different people's wishes to try and find the best way to reconcile them. The new website went online on 26 June 2007. Here are the main thrusts of the changes with respect to the previous version (active since May 2005):

- **freshened-up, clearer presentation;**
- **simplified, faster navigation, particularly for easier searching;**
- **each visitor's identity and personal status is now taken into account (if they so wish) — although of greatest benefit to our magazine subscribers, non-subscribing but regular visitors will find this helpful too;**
- **articles and other files are no longer downloaded using phone surcharge, but are paid for using Elektor credits (E-credits) on the site itself;**
- **the secure payment methods have been improved and extended to include PayPal;**
- **the professional tools now in place for sending out our free electronic 'E-weekly' newsletter will let us improve distribution.**

It's actually quite hard for the individual to truly appreciate the scale of the new Elektor website (**Figure 1**). Designed to be equally **convenient to use** for our readers in East Midlands as for those in Bangalore or further afield still, it's a site with four faces, in four languages (German, English, French, and Dutch). And it's also **your**

Figure 1. This screen grab from the new Elektor website gives an idea of the organization of your electronics platform. A good balance has been struck between physical and virtual products.

ebsite
diversity!

personal shop counter on a worldwide scale, where every Internet user, wherever they are, can pay for their purchases in the currency they're used to, whether that's €uros, pounds sterling, Swiss francs, or US dollars, using the payment method they prefer. Add to this the number of options in terms of shipment methods, and you'll get some idea of just how complicated it all is. Elektor readers, our strength lies in your diversity!

www.elektor.com

Homepage

Whilst the domain name www.elektor-electronics.co.uk continues to exist, with the launch of our new websites you are automatically switched through to www.elektor.com. The various menus and tabs on the homepage show a variety of services on offer from various Elektor departments including sales, subscriptions and of course editorial. These include our famous PCBs, kits and modules supplied through mail order. There's also information on conventional physical media, printed documents, CD-ROMs, etc. On the same site you can also find virtual information accessible online directly from your own home: downloads of magazine articles in PDF format, project software, extra documentation, free software, news items, and responses to questions in the forum. On the German and Dutch versions of the Elektor site you can also find special lectures (masterclasses), workshops, seminars – all activities that Elektor is getting ready to develop for the UK market too. In the same way that the horizontal menu bar doesn't change, the contents of the left-hand column also stays the same wherever you are on the site. The other blocks change, not just with the page you're on, but according to your **visitor status**. The website content is adapted to your status, so what you actually see may depend on whether you're logged in or not, or are an Elektor magazine subscriber or not.

My Elektor

Interactivity between Elektor and visitors to its website has been developed in such a way that people who just drop in don't remain 'just another' anonymous visitor, but can – if they so choose – be recognized individually. Logging in to our new site is a personal thing between you and us. Magazine subscribers are the first to see the benefit of this recognition – as soon as they sign up on the new website, they get a welcome gift of 30 Elektor credits (**Figure 2**). Subscribers enjoy other advantages too (see 'E-credits' below).

From now on, you won't need to use a nickname to log in to the site (although you'll still use it in the forum), just your e-mail address.
Each visitor is invited to create their own profile on the site,

Figure 2.
Your way in to the site and your control panel.

which can remember their delivery (and/or billing) address. This profile also allows regular customers to define a preferred payment method (credit card, PayPal, etc.).
In this same 'My Elektor' block (bottom left of all website pages) you'll have direct access to your shopping cart, as well as your E-credits balance – we'll be coming back to that later. Didn't we tell you the site would be more convenient?

Products

The Elektor range of products and publications also appears in the left-hand column of the website and so remains within mouse range at all times. Wherever you are on the site, you can go directly to any category of product (**Figure 3**).

Figure 3.
To allow direct access to any product category, this list remains visible wherever you are on the site.

www.elektor.com/credit

E-credits

One of the great new features on the site is the introduction of Elektor credits (**Figure 4**) for our paid downloads. You can buy E-credits just like any other product or publication on the site, your personal balance is credited, and then you can use them as you wish to pay for downloads.

One of the advantages of this new system is the considerable reduction of the standard charge for an article pdf or PCB artwork pdf – now only £ 0.80 (€ 1.20) per file,

Figure 4.
Elektor credits (E-credits) make downloading from the new site considerably easier. The special rates are exclusive to magazine subscribers.

A BRAND NEW SITE

Figure 5.
A website is only as good as the speed and accuracy of its search engine.

as against £ 1.00 on the old site (which did not offer the € currency).
Elektor magazine subscribers benefit from a special rate for buying bulk credits (in 60s or 120s) at a preferential rate – provided, of course, they have duly logged in to the site at least once using their subscriber number and personal code. Non-subscribers can buy bulk credits too, simply by using the 'quantity' box.

Improved searching

Also permanently available through the left-hand column are the new site's greatly improved search functions. The Search box covers the entire website, while magazine articles can be searched separately, using a two-step **filter,** first for **the Subject Area**, then deeper for **Year Volume** and/or **Alphabet** (actually, alphanumerical order), see **Figure 5**. Searching is fast and the results are very easy to read.

www.elektor.com/magazines

The Magazine page has been revamped. Tabs now make it possible for the information to be presented even more

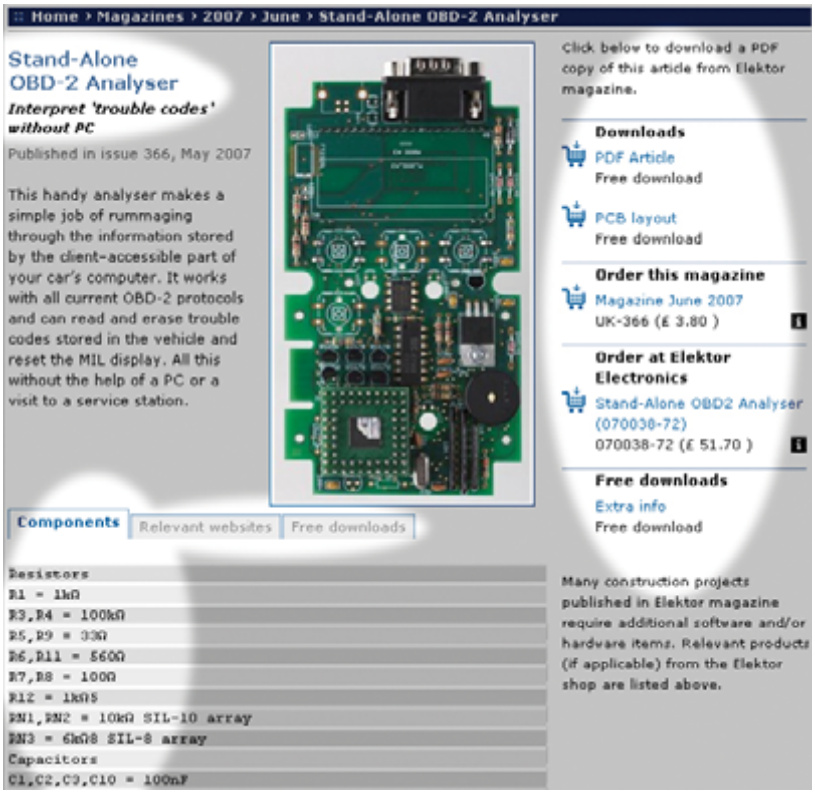

Figure 6.
The new magazine article presentation brings together all the relevant details onto a single page with tabs and links.

Figure 7. In the E-shop too, the use of tabs makes for easier browsing.

clearly. components lists, hyperlinks, related articles, corrections, supplementary information, related shop products – all this can amount to a great deal of information, which is now much more clearly structured (**Figure 6**). The publication month is shown for each article, with a link to take you straight to the corresponding magazine issue.

www.elektor.com/shop

Presenting the products via tabs means several categories can be shown side by side and lets you move quickly between them without getting lost.
The specific search function within each subject area make it possible to target searches better (**Figure 7**). You'll find the same presentation and interdependent links between the products in all the Elektor product and publication categories: bare PCBs, kits, modules, CD-ROMs, books, E-blocks, special offers and more. It's well worth paying a visit!

www.elektor.com/forum

The Elektor forum contents have been transferred to the new website in their entirety. This is a substantial treasure-house of valuable information on many projects and background articles published in Elektor. We're quite sure this new version of the forum site will soon once again be seeing the lively level of activity of the early months of 2007.
Amongst the new features, the RSS feed lets you follow the flow remotely. Another very effective improvement for browsing the website is the trail or 'breadcrumb' that helps you find your way back up the forum tree (**Figure 8**).
Once you've realized how it works, this hierarchical line of links can save you a lot of time moving from one discussion to another in the forum.

www.elektor.com/faq

FAQs (frequently asked questions) have been added in particular about the new log-in procedure. FAQs for published projects may also appear here in due course, but for the time being they remain under the relevant forum topics (for example, the June 2005 'GPS Receiver on USB').

www.elektor.com/subs

Amongst the other key functions of the site is also the possibility of taking out a subscription online – one page that's really worth a visit, especially as there are now more advantages than ever for Elektor subscribers. And that's just for starters!

www.elektor.com/news

Not only have news items on the website been brightened up with one or more illustrations (where available from our sources), but they now appear as a constantly-changing display on the home page.
What's more, when visitors come across a news item they find interesting, they can click on a link to share the information automatically with one or more friends.
The old site's news access restriction has been lifted – from now on, recent news items are also accessible to visitors who are not logged-in. Login is only required for retrieving archived news items.

Conclusion

Having seen the scale of the changes, it's no surprise the new Elektor website was longer than planned in gestation – in spite of all our efforts. Just like eternity, it always seems longest near the end – but we think you'll agree, the finished result was well worth the wait.

(070155-I)

Figure 8. Click on the hierarchical links to move back up the forum tree.

Good and Occasi

Comparison

Rolf Hähle

Building a good-sounding amplifier on your own is not as easy as it may seem at first glance. Using fully assembled, aligned and guaranteed modules can increase your chance of success significantly, while still leaving ample room for creative freedom. Our test reveals that the available products differ in many regards.

You might think that amplifiers are like sand on the beach. But if you restrict your search for fully assembled amplifier modules to hi-fi applications and omit modules for motor controllers, RF transmitters and all other industrial applications, the range of available products shrinks quite quickly.

For this test, we selected eleven different modules from various manufacturers, with an output power range extending up to nearly half a kilowatt. They can be classified as linear or switch-mode amplifiers, depending on their operating principle. The representatives of the 'linear' category in our test group include rather simple types as well as extremely sophisticated models. Three of the modules are simple IC-based designs, while one is fully encapsulated and thus keeps its secrets to itself.

The most elaborate modules come from manufacturers of the switch-mode amplifiers, all of which belong to the class of PWM amplifiers. Amplifiers in this class, which is also called Class D, are being used more and more often as hi-fi amplifiers, where they are sold as 'digital amplifiers'. Of course, most of them do not actually operate in digital mode (due to the absence of an A/D converter), but they have nevertheless ignited a religious war among technology adherents. One of the contentious issues here – and a subject of heated debate in various forums – is whether overall negative feedback in a Class D amplifier should be tapped off before or after the output filter. All variations are represented in the test group. NewClassD leaves the pre/post choice to the user and ColdAmp employs global

onally Favourable

test of hi-fi amplifier modules

About the author

Rolf Hähle has been actively involved in building amplifiers and loudspeakers since the age of 12. While he was studying for a degree in mechanical engineering, he accumulated a wealth of experience in electronics and electroacoustics by repairing hi-fi equipment, building and selling various DIY loudspeakers, and installing 'carnival-proof' public address systems in a variety of pubs in Cologne. After several years as an editor at ***Elektor Germany*** and a tour in the PR department of a manufacturer of PC-based measuring equipment, he has been in charge of the measuring laboratory of the hi-fi magazine ***Stereo*** for the last 10 years.

feedback in combination with a fixed switching frequency and a notch filter.

Test procedure

In order to subject the amplifiers to proper evaluation, we of course loaded them adequately. As we wanted to test the capability of the amplifier instead of the capability of the power supply, we used a pair of stabilised laboratory power supplies made by Delta Electronics to avoid any issues in that area. For each supply voltage, we had access to a maximum voltage 70 VDC at up to a whopping 45 A if necessary. That's what you call a sustainable DC source. We only used a specific mains transformer for our measurements if the manufacturer recommended or offered it, and this is also noted in the results. We measured the output power using non-inductive 8-ohm and 4-ohm resistors with adequate power ratings. All other results listed in the table were measured using a 4-ohm load.

The readings and all signals necessary for making the measurements were obtained from a Rohde & Schwartz model UPL Audio Analyzer. The same measurement procedure and sequence was used for all the amplifiers. Exceptions were only made where they were unavoidable (for example, there's little point in trying to measure intermodulation distortion using 8-kHz and 60-Hz signals with an output stage that has a built-in low-pass filter with a 2.6-kHz cutoff frequency).

For each sample module that we tested, the complete results and a frequency response curve with a sweep range of 20 Hz to 100 kHz are shown in the large table.

(060322-I)

Manufacturer	Website	Module	Price* (incl. VAT) * rrp (approx.)	Options
Amplimo	www.amplimo.nl	A120	£ 62 (€ 90)	Power supply kit (transformer, rectifier and electrolytic capacitor) (£ 48 / € 70); speaker relay (£ 4 / € 6)
Coldamp	www.coldamp.com	BP4078	£ 86 (€ 125)	Switch-mode power supply (£ 130 / € 190)
Ground Sound	www.groundsound.com	PA 3CC	£ 134 (€ 195)	PSU4SA power supply module (£ 162 / € 235)
Hypex	www.hypex.nl	UCD400ST	£ 83 (€ 120)	Power supply module: standard (£ 55 / € 80) or high-grade (£ 137 / € 200); transformers
Marchand	www.marchandelec.com	PM224	U$ 200	Power supply incl. transformer (U$ 100 and up); heat sink (U$ 20)
Monacor	www.monacor.de	IPA-50	£ 41 (€ 60)	
NewClass D	www.newclassd.com	NCD1	£ 196 (€ 285)	Power supply module (£ 110 / € 160 and up); soft-start circuit (£ 27 / € 40)
Newtronics	www.newtronics.net available from www.lautsprechershop.de	Verstärkermodul AMP 7293	£ 66 (€ 95)	Power supply module (£ 92 / € 133); transformers
Sitronik	www.sitronik-industrie.de	VP 703B	£ 48 (€ 70)	Transformers (£ 21/ € 30)
Thel	www.thel-audioworld.de	Accusound 100	£ 172 (€ 250)	Smoothing filter (£ 65 / € 95 and up); mains filter (£ 26 / € 38 and up); heat sink (£ 26 / € 38 and up); VU meter; transformers
Velleman	www.velleman.be	VM100	£ 35 (€ 50)	

* Preisempfehlungen/ungefähre Preise

Amplimo A120

Amplimo in the Netherlands produces a whole series of amplifier modules covering a power range of 30 W (A30) to 180 W (A180). Our text example, a model A120, is only 8 cm wide by 5 cm high including the heat sink. Its depth of 12 cm is mainly due to the long fins of the heat sink on the rear of the module. Nothing can be seen here of the electronics, since they are entirely encapsulated. The plastic that surrounds the electronic components is linked to cutouts in the extruded heat sink to create a module that makes a very robust impression. Eight tinned metal terminals stand at the end of the module opposite the heat sink. Besides two terminals for the balanced supply voltage (±47 V), they include a ground terminal in the middle and the signal input. The RELAY output pin switches to ground a few seconds after the supply voltage is applied. This allows a relay to be used to eliminate loudspeaker clicks during switch-on and switch-off. The module is ready to use without any additional circuitry. An integrated limiter is activated automatically if the module is overdriven, The LED output provides a constant current to drive a LED indicator when the limiter is restricting the signal. The limiter can be disabled by connecting the LIM pin to ground.

Coldamp BP4078

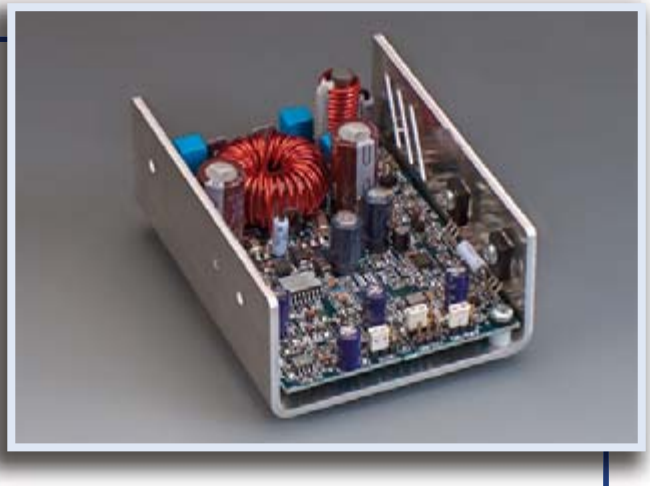

This module has a typical 'industrial' open-frame construction with the PCB fitted in a length of U-shaped aluminium channel, offering adequate cooling for normal use. This suggests mechanical solidity, although the ring-core choke at the output, which is supported only by its leads, clouds the picture somewhat.
The BP4078, which has a balanced input and operates in PWM mode, makes an exceptionally robust impression in the electrical domain. It delivers 400 W into 4 Ω or 240 W into 8 Ω, and it can also be operated with a 2-Ω load. This module measures just under 8 by 10 cm, and with a height of 39 mm it occupies only one height unit in a 19-inch rack. Unlike most PWM amplifiers, it has an overall negative feedback arrangement that causes the frequency response to be largely independent of the load impedance.
The supply voltage and loudspeaker are connected using 6.3-mm spade connectors, and all other signals are connected via a single-row pin header. The module has over/undervoltage protection and overcurrent protection. A fault condition – even if it is only transient – is indicated on a separate output for at least 2 s. There is also an output for a LED to serve as a clipping indicator, as well as a clock pin (CLK) that can be used to synchronise a group of modules. Thanks to a remote control port, a (normally jumpered) connector for a volume control, and the option of powering the driver stage separately, the module can be used for practically any application. The very extensive documentation (in English) is easy to understand, and there application notes for optional configurations are included.

Ground Sound PA3CC

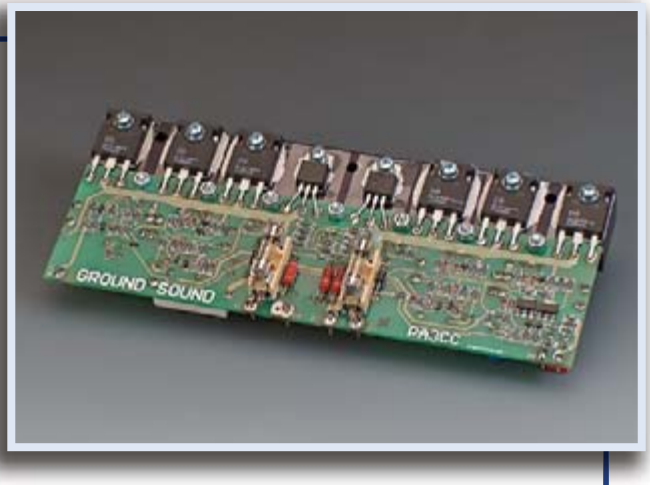

This conventionally designed power amplifier with bipolar transistors operating in Class AB comes from Denmark. The manufacturer rates the output power at 300 W, but in our measurements the limit was reached at 380 W. The entire circuit is built using discrete components. The aluminium profile on the long edge has three output transistors for each supply voltage fitted on top, with the driver transistors fitted on the bottom. The PCB is double-sided and through-hole plated, with SMD components on the top and conventional components on the bottom. All connections are provide by adequately dimensioned solder eyes.
There is a Mute input that can be pulled to ground to eliminate clicks when switching the output stage on or off. The module shuts down reliably if it reaches a temperature above 90° C, and it resumes operation automatically after cooling down. Two conventional fuses (5 × 20 mm, 6.3 AT) in the supply voltage lines are located conveniently on top of the board. The manufacturer specifies the minimum allowable load as 2 ohms. We made our measurements at 4 ohms, and we had no doubts at all regarding electrical or thermal stability. This was done with the module attached to a heat sink (not included with the module) rated at 0.6 K/W. The operating instructions are comprehensive and provide some suggestions and explanations for optimum cabling.

Hypex UCD 400

These amplifiers with their characteristic blue anodized T-shaped aluminium extrusions come from the Netherlands. The extrusion is used to attach the module to a heat sink, to secure the power transistors mechanically, and to bond them thermally. Hypex can supply modules rated at 180, 400 and 700 watts output power in two different versions. We tested a 400-watt module in the standard version. An 'Advanced Version' with a higher-spec input opamp is also available. The modules operate properly from unregulated supply voltages in the range of ±45 V to ±65 V. Overall negative feedback is integrated into the circuit design. It taps off the feedback signal after the output filter, which minimises the effect of load impedance on the gain. This was verified in practice: the frequency responses with 4-ohm and 8-ohm loads are the same within 0.5 dB. That's hardly a matter of course with a Class D amplifier.
A balanced input and a remote control input are available at a four-way pin header, while the supply voltage and loudspeaker connections are made via broad, readily accessible spade terminals at the front. In our test with 430 W into 4 Ω and 226 W into 8 Ω, the amplifier yielded slightly higher figures than the values specified by the manufacturer. With dimensions of 8 × 3 × 9 cm, this module is one of the smallest of the tested units, but it sailed through the entire measurement procedure without any supplementary cooling and without shutting down.

Marchand PM224

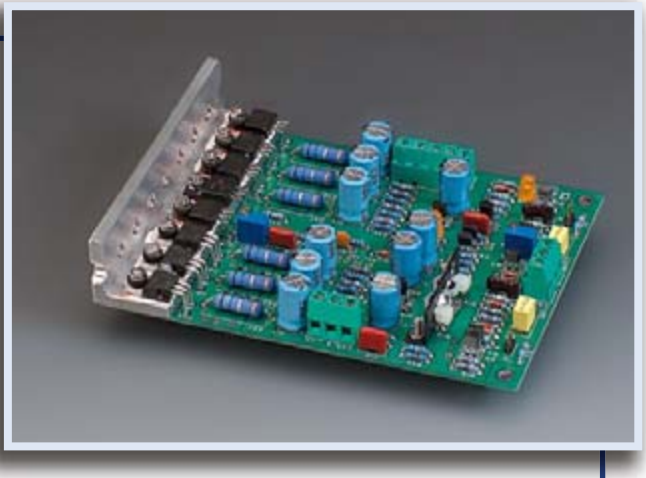

This Rochester, New York (USA) based manufacturer makes a power amplifier built with discrete components that occupies an area of 10 by 14 cm and fits on a Euroboard PCB with room to spare. With the appropriate supply voltage, the PM224 can deliver 200 W into 8 Ω or 4 Ω. Marchand recommends supply voltages in the range of ±45 V to ±65 V, or less for Class A operation. The input is a balanced design, but it can be driven single-ended without any problems by tying the unused input line to ground. There are two 2-way pin headers on the board that can be used to jumper out the input coupling capacitors. This allows the module to be operated with AC or DC coupling. The supply voltages and loudspeaker are connected via PCB-mounted screw terminals. There are separate supply voltage terminals for the driver and output stages. The advantage of this is that powering the driver stage with a higher voltage allows a greater voltage swing in the output stage and thus better overall efficiency.
As the module can also be purchased as a DIY kit, it is supplied with complete circuit documentation consisting of a schematic diagram, component layout and components list.
The assembly instructions (in English) include detailed descriptions of the operational configuration options (individual or bridge) and possible adaptations. Component values for gain values between 20 dB and 40 dB are provided in two tables, and different quiescent current settings are shown for operation in Class AB or Class B mode. We measured the module operating in Class AB with the recommended heat sink (0.8 K/W).

Monacor (Monarch) IPA-50

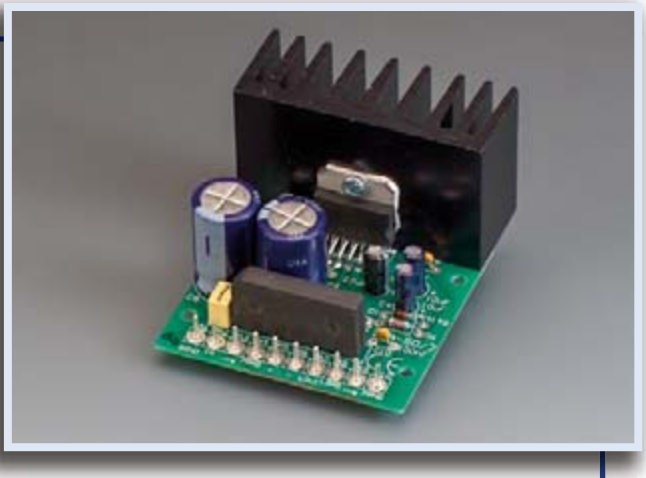

The smallest module in our test implements the standard application circuit for the SGS Thomson TDA7296. Monacor recommends ±22 V for operation with a 4-ohm load or ±29 V for an 8-ohm load. This corresponds to an sinusoidal output power of 45 W, but the small heat sink included with the module is definitely not adequate for this. The data sheet recommends using a small fan for continuous operation.
The compact module (with dimensions of only 7 × 5 × 8 cm) has short-circuit and overtemperature protection. Despite the small size of the circuit board, it includes a bridge rectifier and electrolytic smoothing capacitors. However, 2200 µF per supply voltage is on the small side in our opinion, so we measured the module using the laboratory power supply as well as with the recommended transformer. Using a separate power supply was no problem, since all connections are accessible on the front of the module via solder posts. This makes it possible to power the module from an AC source or connect a DC source after the built-in smoothing capacitors. As could be expected, distortion and intermodulation are distinctly worse with the module operating from the transformer, but transient performance is distinctly better thanks to the higher no-load voltage. Despite the simple design, the measured results are not just OK, but in fact quite good. The only thing that stands out is the rapid roll-off in the bass region. Maybe the input capacitor (470 nF) is too small. The module comes with concise but adequate multilingual documentation, including a schematic diagram.

Newtronics AMP 7293

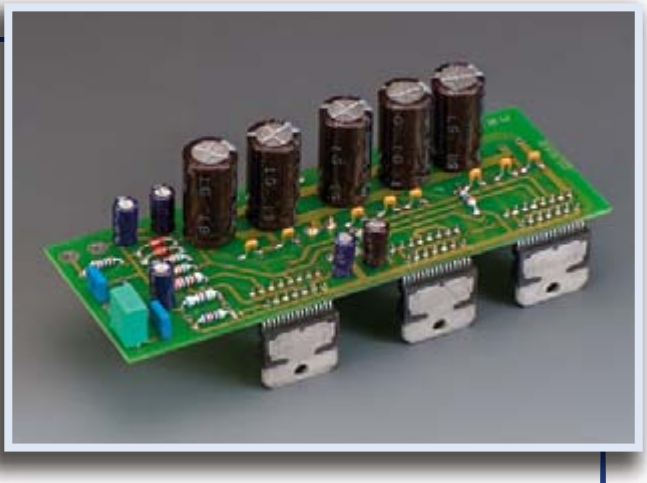

The AMP 7293 module comes from Germany. It is the only module in the test that is available in two mirror-image versions. If you use an enclosure with heat sinks on the sides, this allows the wiring between a power supply located in the middle and the two amplifier boards to be kept very short. Three SGS Thomson 7293 amplifier ICs are wired in parallel on the compact PCB (dimensions 5 × 14 cm). The manufacturer claims that this arrangement ensures that loads with a impedance as low as 1.4 Ω can be supplied with adequate current. Solder-mount 6.3-mm spade terminals are provided for the loudspeaker and power supply connections, and two solder eyes are provided for the unbalance audio input.
This module is very easy to use. No settings are necessary, you don't have to fit any jumpers, and there are no details to take into account. The Class AB amplifier can operate from a mains transformer with dual secondary windings rated at 22 V or 30 V each (rms AC), which yields an output power of just under 100 W or just under 190 W, respectively, into an 8-ohm or 4-ohm load. The manufacturer recommends a heat sink rated at 0.8 K/W for 8-ohm operation or 0.5 K/W for 4-ohm operation.

NewClassD NCD1

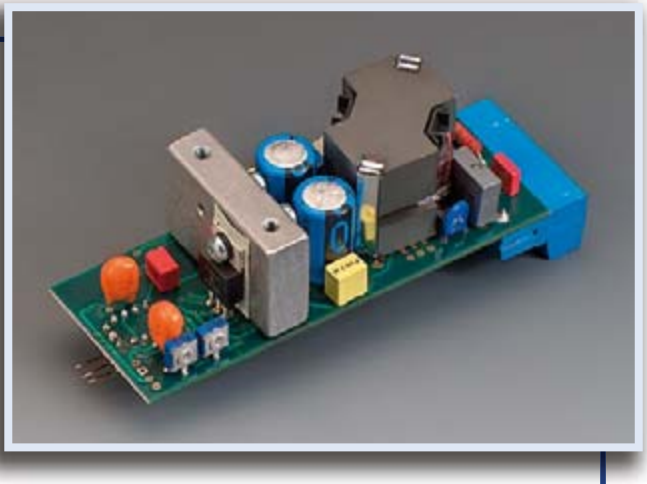

The circuit board, which measures only 11 × 5 cm and has components on both sides, houses a switch-mode amplifier that according to the manufacture operates in a special mode called 'Nano Alignment', which is not further described. The efficiency is slightly lower than with a typical Class D amplifier. Consequently, an aluminium plate with a thickness of 4 to 6 mm and dimensions of at least 10 × 15 cm is recommended for cooling a pair of amplifier modules. The layout is very straightforward, and all control and power inputs and outputs are available on a 7-way pin header on one of the narrow edges of the board.
The very informative documentation discusses many aspects of hi-fi. For example, the sound depends on whether the negative feedback signal is tapped off before or after the output filter (pre-filter or post-filter mode). This can be configured on the PCB by means of a solder bridge. The input opamp (a LM6172) is socket-mounted, so you are free to experiment with the opamp of your choice.
A special feature of the switch-on procedure for the NCD1 can lead to inconsistencies if a supplementary soft-start circuit is used in the power supply. A microcontroller in the amplifier measures the actual value of the supply voltage approximately 2 seconds after switch-on and stores the measured value as a reference. If the supply voltage does not reach its nominal level before this time, the module will shut down due to the presumption that the voltage is too low. We used ±45 V for the test, but the maximum rated voltage is ±63 V (with a rated output power of 400 W into 4 ohms).

Sitronik Industrie VP 703

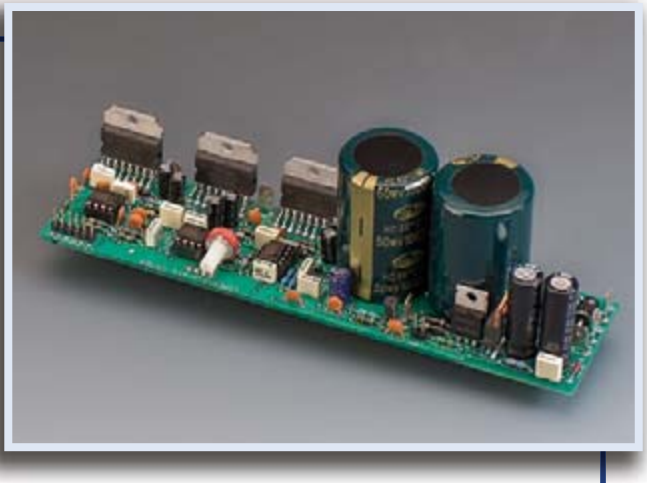

This fully assembled and cabled module is a complete backplane amplifier with two channels and a filter circuit, which is designed to drive the tweeter and woofer of a two-way speaker. It has a balanced input with an XLR connector and an unbalanced input with a Cinch connector. The input can be selected using a toggle switch. The levels of the two channels can be set using two potentiometers. The corner frequencies of the third-order high-pass filter and the low-pass filter (also third-order) are fixed at the practical value of 2.6 kHz (–5 dB). The manufacturer can also configure other frequencies on request. The filter response can also be changed (up to seventh-order) by means of a daughterboard. The VP 703 is a conventional design. The filter circuit is implemented entirely using NE5532 ICs, and the output stages use two TDA 7294s for the treble channel and two TDA 7294s (operating in bridge mode) for the bass channel. A 4-ohm tweeter and an 8-ohm woofer must be used in order to achieve the maximum output music power (70 W treble and 130 W bass). The power supply is adequately dimensioned with a 220-VA toroidal transformer and two 10-mF capacitors.
The amplifier ICs have internal short-circuit, overtemperature and DC offset protection. The module makes a very robust impression, and with dimensions of 31.5 × 19.6 cm it can hardly be called 'small'. An allowance of 12 mm on each side can be subtracted if the module is built into an enclosure, so a cutout in the loudspeaker enclosure with dimensions of 29.1 × 17.2 cm is adequate.

Thel Electronic Accusound 100

Thomas Hartwig, the head of Thel Elektronik, kindly sent us a complete stereo amplifier with the latest-generation Accusound 100 modules for our test. This very elaborately finished module has an aluminium extrusion fitted along one of the long edges, with ten MOSFET power transistors screwed onto it. The smoothing capacitors, a DC protection circuit, and a pair of relays wired in parallel for switching the loudspeakers in or out are also fitted on the double-sided PCB. The module operates from balanced DC supply voltages in the range of 20 V to 80 V, with a maximum rated value of ±95 V. If you want to achieve the maximum possible voltage swing from the output, the driver stage can optionally be powered with a voltage that is 5 to 7 V higher and possibly stabilised separately. The bottom of the circuit board is fitted with hefty copper strips to reinforce the PCB tracks in the region of the output transistors. The supply voltage connections and loudspeaker terminals are implemented as threaded studs. Instructions for operating the module in Class A or Class AB are available on the Thel website. Thel can also supply the module with the same technology under the designation Accusound 40, with only four power transistors and correspondingly reduced maximum power. Four different versions of the Model 100 are also available. They differ in terms of circuit design and the quality of the components used in their construction.

Velleman VM 100

The traditional design of this power amplifier, which operates in AB mode, manages to do its job with six small-signal transistors (one of which provides temperature stablisation for the quiescent current) and two bipolar power transistors. The circuit board, which measures slightly less than 7 × 11 cm, has room for the rectifier and smoothing capacitors, even though all the components are fitted on one side of the board. However, the smoothing capacitors are only 3300 µF, which is on the small side. A red LED serves as a supply voltage indicator. A 47-kΩ potentiometer can optionally be connected ahead of the unbalanced input to act as a volume control. The manufacturer recommends a mains transformer with dual secondary windings rated at 25 V to 30 V AC, which is sufficient for 70 W into 8 Ω or 100 W into 4 Ω. The concise but graphic data sheet (in German) specifies a minimum load impedance of 4 Ω. Velleman explicitly recommends against changing the preset quiescent current level, which can be adjusted using an easily accessible and extensively described trimpot. For our test, we powered the module with ±40 V DC connected to the PCB directly after the rectifier diodes. Spade terminals are provided for the supply voltages and loudspeaker, while the audio signal reaches the amplifier via two solder pins. This is a mechanically robust, compact and economical amplifier.

Summary

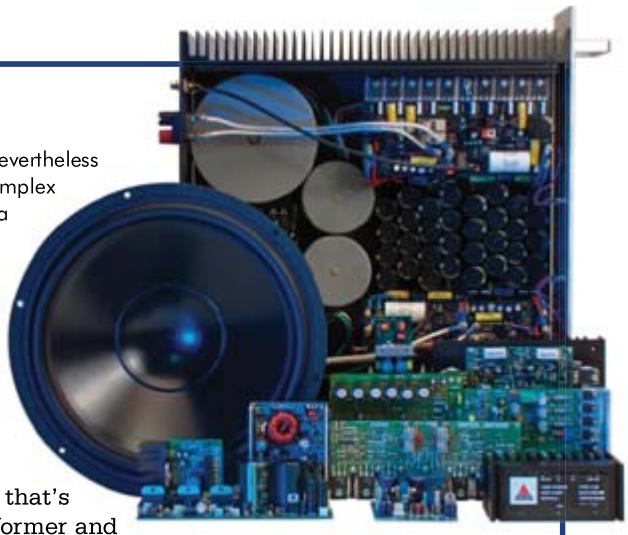

All in all, we tested quite a wide assortment of modules. They ranged from simple but nevertheless good designs, which are open to user measurements, soldering and modification, to complex closed designs. If you simply want to amplify a signal, the Monarch module is certainly a good choice. The Velleman module undoubtedly has the best price/performance ratio, and it is also available as a DIY kit at an even lower price. Relatively demanding hi-fi fans will appreciate the elaborate circuitry of the Ground Sound, Marchand and Thel modules. If you are also looking for real power (400 W at 4 Ω), you will find what you need with the Class D amplifiers, which now offer true hi-fi sound. The specifications of the Coldamp, Hypex and NewClassD modules are quite similar. Of course, it's difficult to judge the sound of these three amplifiers from the measured results, so we would like to hear from readers who have experience with one or more of these modules.

A few hundred pounds for a pair of modules is nothing to sneeze at, and that's aside from the other components you have to provide (heat sink, transformer and enclosure), which also aren't exactly cheap. However, with this approach you can build an amplifier that can hold its own against ready-made high-end equipment at a much higher price. And when you use pre-assembled modules in DIY construction, you can rest assured that the end result will work properly and sound the way it should.

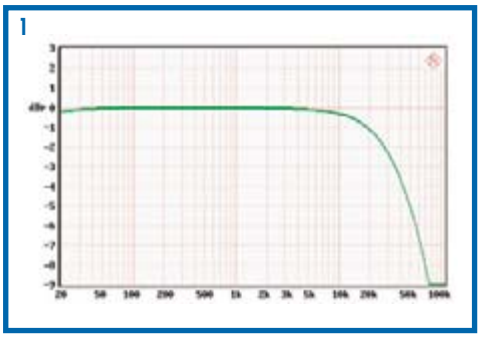

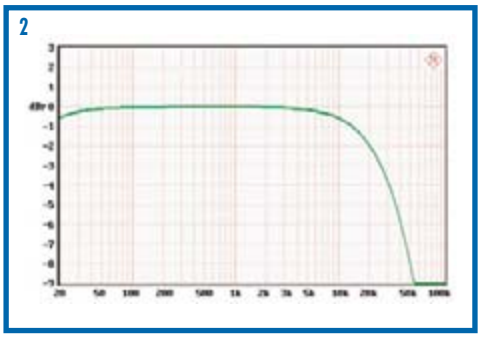

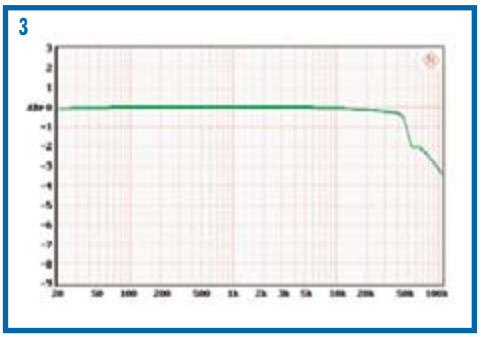

Measurement	Condition(s)	Unit	Amplimo A120	Coldamp BP4078
Power, Distortion, Signal/Noise Ratio				
sine power 1% THD, 1 kHz	into 8 Ohm	W	117	222
	into 4 Ohm	W	57	414
Power bandwidth 20 Hz - 20 kHz	at 1 W into 4 Ohm	dB	–0.2 / –1	–0.5 / –1.9
Output Resistance (40 Hz)		mOhm	12	74
Distrortion (1 kHz / into 4 Ohm)	at Pmax –1 dB	% THD	0.012	0.58
	at 1 W	% THD	0.02	0.08
Intermodulation (8 kHz and 60 Hz, voltage ratio 4:1)	at Pmax –1 dB	%	6.8	4,5
	at 1 W	%	0.21	0.54
Signal/Noise Ratio (1 k termination)	referenced to 1 W	dB(A)	82	79
	referenced to 50 mW	dB(A)	58	51
Connecting values				
Input sensitivity for full power at 4 Ω		mV	684	940
Input resistance		kOhm	116	13,8
Miscellaneous				
Upper frequency limit		kHz	35	26
Supply voltage during test	–Vcc/–Vss	V	47	60
Module dimensions (approx.; rounded off)	Width / Height / Depth	cm	12 / 5 / 8	10 / 4 / 8
Sweep to 110 kHz at 1 W			Fig. 1	Fig. 2

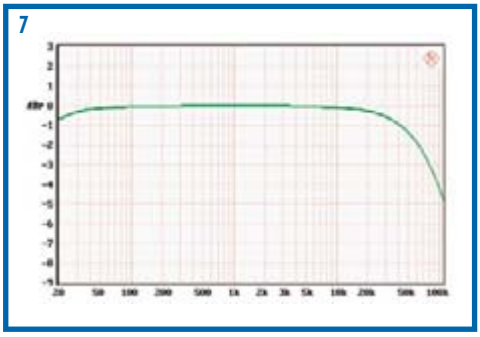

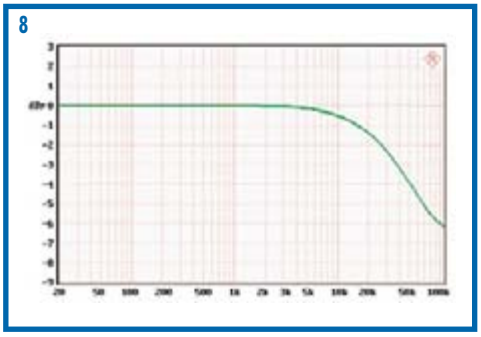

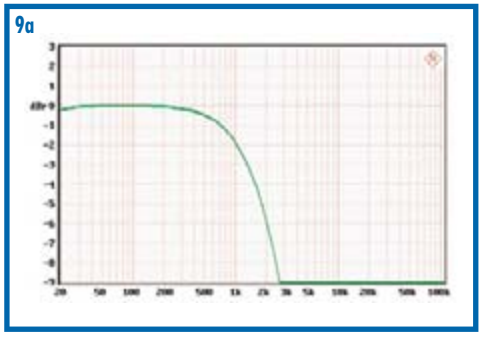

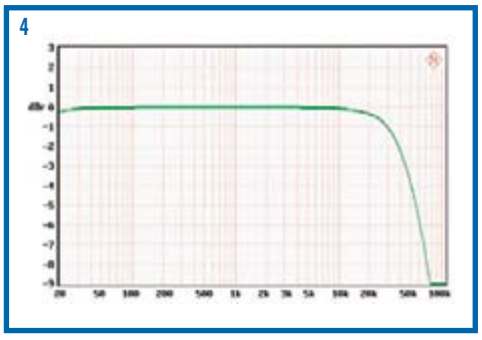

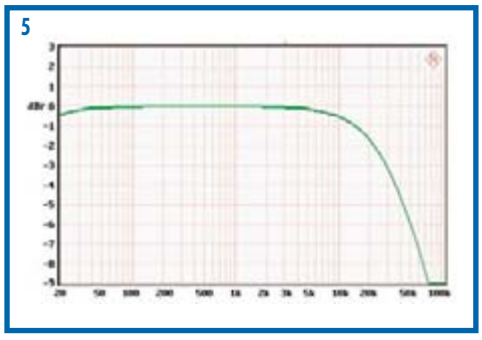

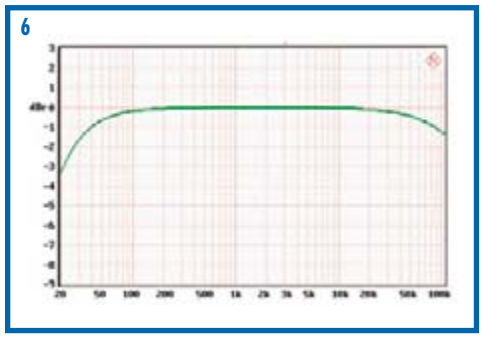

Hersteller / Typ

Ground Sound PA3CC	Hypex UCD 400 ST	Marchand PM 224	Monacor IPA50 m. Netzt.	Newtronics AMP7293	NewClassD NCD1	Sitronic VP 703	Thel accusound 100 2 CH Amp, compl.	Vellemann VM 100
202	226	127	44	96	99	85	2x 170	86
380	429	145	61	186	198	50	2x 273	133
–0.1 / –0.1	–0.2 / –0.4	–0.4 / –1.7	–3.2 / –0.1	–0.7 / -0.3	0 / –1.3	-	–0.35 / –0.1	0.2 / 0
39	12	22	123	31	43	12	24	424
0.041	0.55	0.009	0.1	0.67	0.4	0.006	0.66	0.14
0.052	0.0056	0.006	0.008	0.228	0.03	0.005	0.056 / 0.094	0.0074
0.11	1.07	0.09	0.14	1.25	1.5	-	3.77	0.32
0.147	0.023	0.083	0.046	1.06	0.047	-	0.63	0.039
82	98	80	87	89	81	83	85	100
58	72	54	60	64	55	57	60	75
3185	2097	607	488	353	602	280	1066	700
4,3	95.9	88	22.9	21.9	10	24	15.3	46.1
93	46	29	>110	78	38	-	>110	>110
60	60	50	32 (PSU)	40	40	own PSU	own PSU	40 (Lab PSU)
18 / 3 / 8	8 / 3 / 9	10/ 3 / 14	7 / 5 / 8	14 / 5 / 5	11 / 5 / 4	20 / 7 / 32	43 / 14 / 45	17 / 7 / 6
Fig. 3	Fig. 4	Fig. 5	Fig. 6	Fig. 7	Fig. 8	Fig. 9a/b	Fig. 10	Fig. 11

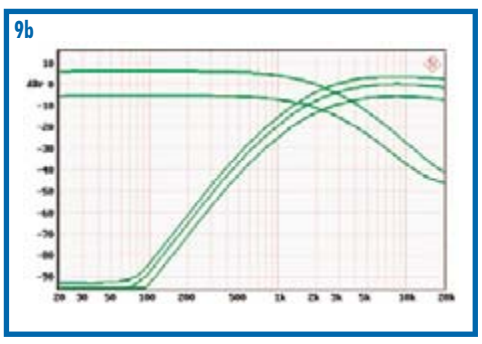

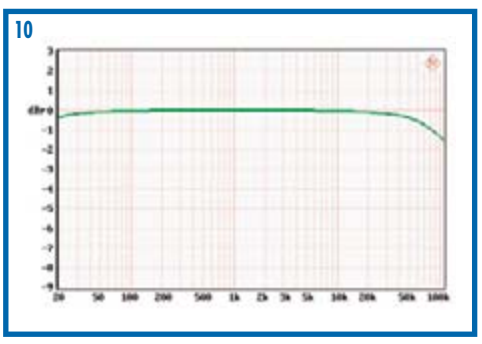

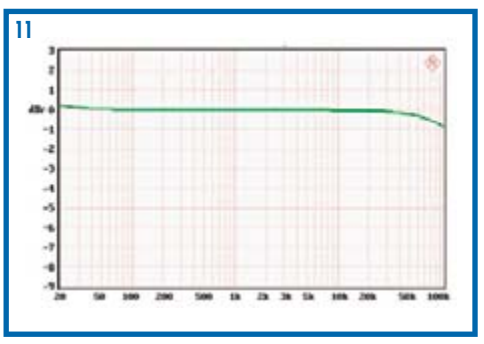

Things of the past.

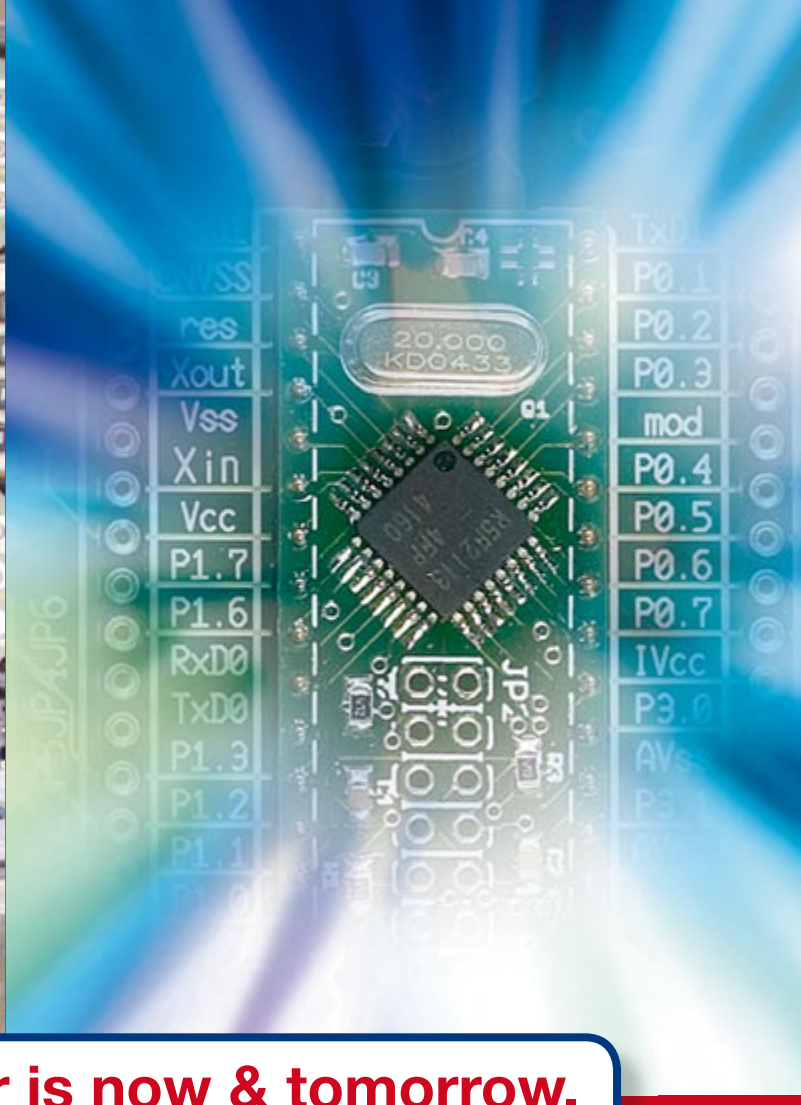

Elektor is now & tomorrow.

Secure a head start in electronics with a subscription!

Advantages to subscribers:

- Cheaper than 11 issues from the newsstand
- Subscribers get up to **40% discount** on special Elektor products
- As a welcome gift you get a free **1GB MP3 player** worth £ 34.50
- No queues, travelling, parking fees or 'sold out' Elektor is supplied to your doorstep every month
- Always up to date – read your copy before everyone else

www.elektor-electronics.co.uk/subs
Tel. +44 (0) 208 261 4509
Or use the subscription order form near the end of the magazine.

elektor
the world-leading network for electronics

mikroElektronika

DEVELOPMENT TOOLS | COMPILERS | BOOKS

CAN-1 Board - Interface CAN via MCP2551.

CANSPI Board - Make CAN network with SPI interface.

RS485 Board - Connect devices into RS-485 network

Serial Ethernet - Make ethernet network with SPI Interface (ENC28J60).

IrDA2 Board - Irda2 serve as wireless RS232 communication between two MCU's.

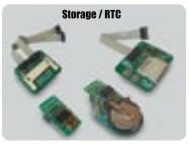

CF Board - Easy way to use Compact flash in your design.

MMC/SD Board - Easy way to use MMC and SD cards in your design.

EEPROM Board - Serial EEPROM board via I2C interface.

RTC Board - PCF8583 RTC with battery backup.

ADC Board - 12-bit analog-to-digital converter (ADC) with 4 inputs.

DAC Board - 12-bit digital-to-analog converter (DAC) with SPI.

Keypad 4x4 Board - Add keypad to your application.

Accel. Board - Accel. is an electronic device that measures acceleration forces .

PICFlash programmer – an ultra fast USB 2.0 programmer for the PIC microcontrollers. Continuing its tradition as one of the fastest PIC programmer on the market, a new PICFlash with mikroICD now supports more PIC MCUs giving developer a wider choice of PIC MCU for further prototype development. **mikroICD** debugger enables you to execute mikroC / mikroPascal / mikroBasic programs on the host PIC microcontroller and view variable values, Special Function Registers (SFR), memory and EEPROM while the program is running.

- All of our products are shipped in special **protective boxes**.
- On-line secure ordering provides fast and safe way of buying our products.

EasyPIC4 Development Board

Complete Hardware and Software solution with on-board USB 2.0 programmer and mikroICD

Following tradition of its predecessor EasyPIC3 as one of the best PIC development systems on the market, EasyPIC4 has more new features for the same price. The system supports 8-, 14, 18, 20, 28 and 40 pin PIC microcontrollers (it comes with a PIC16F877A). **USB 2.0** on-board programmer with **mikroICD** (In-Circuit Debugger) enables very efficient debugging and faster prototype development. Examples in **C**, **BASIC** and **Pascal** language are provided with the board.

LV24-33 Development Board

Complete Hardware and Software solution with on-board USB 2.0 programmer and mikroICD

System supports 64, 80 and 100 pins **PIC24F/24H/dsPIC33F** microcontrollers (it comes with PIC24FJ96GA010 - PIC24 16-bit Microcontroller, 96 KB Flash Memory, 8 KB RAM in 100 Pin Package). Examples in BASIC, PASCAL and C are included with(in) the system. You can choose between USB and External Power supply. **LV 24-33** has many features that make your development easy. **USB 2.0** on-board programmer with **mikroICD** (In-Circuit Debugger) enables very efficient debugging and faster prototype development.

PICPLC16B Development Board

Complete Hardware and Software solution with on-board USB 2.0 programmer and mikroICD

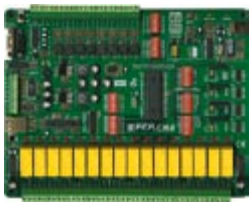

PICPLC16B is a system designed for controlling industrial systems and machines. 16 inputs with **optocouplers** and 16 **relays** (up to 10A) can satisfy many industrial needs. The ultra fast **mikroICD** (In-circuit Debugger) enables very efficient debugging and faster prototype development. Features : **RS485**, **RS232**, **Serial Ethernet**, **USB 2.0** on-board programmer and **mikroICD** (In-Circuit Debugger) on-board.

mikroElektronika Compilers

Pascal, Basic and C Compilers for various microcontrollers

Supporting an impressive range of microcontrollers, an easy-to-use IDE, hundreds of ready-to-use functions and many integrated tools makes MikroElektronika compilers one of the best choices on the market today. Besides mikroICD, mikroElektronika compilers offer a statistical module, simulator, bitmap generator for graphic displays, 7-segment display conversion tool, ASCII table, HTML code export, communication tools for SD/MMC, UDP (Ethernet) and USB , EEPROM editor, programming mode management, etc.

Each compiler has many routines and examples such as EEPROM, FLASH and MMC, reading/writing SD and CF cards, writing character and graphics on LCDs, manipulation of push-buttons, 4x4 keyboard and PS/2 keyboard input, generation of signals and sounds, character string manipulation, mathematical calculations, I2C, SPI, RS232, CAN, USB, RS485 and OneWire communications, Manchester coding management, logical and numerical conversion, PWM signals, interrupts, etc. The CD-ROM contains many already-written and tested programs to use with our development boards.

mikroElektronika manufactures competitive development systems. We deliver our products across the globe and our satisfied customers are the best guarantee of our first-rate service. The company is an official consultant on the PIC microcontrollers and the third party partner of Microchip company. We are also an official consultant and third party partner of Cypress Semiconductors since 2002 and official consultant of Philips Electronics company as well. All our products are RoHS compilant.

http://www.mikroe.com/en/distributors/

Find your distributor: UK, USA, Germany, Japan, France, Greece, Turkey, Italy, Slovenia, Croatia, Macedonia, Pakistan, Malaysia, Austria, Taiwan, Lebanon, Syria, Egypt, Portugal, India.

Uni-DS 3 Development Board

Complete Hardware and Software solution with on-board USB 2.0 programmer

The system supports PIC, AVR, 8051, ARM and PSoC microcontrollers with a large number of peripherals.In order to continue working with different chip in the same development environment, you just need to swich a card. **UNI-DS3** has many features that make your development easy. You can choose between USB or External Power supply. Each MCU card has its own USB 2.0 programmer!

EasydsPIC4 Development Board

Complete Hardware and Software solution with on-board USB 2.0 programmer and mikroICD

The system supports **18**, **28** and **40** pin microcontrollers (it comes with dsPIC30F4013 general purpose microcontroller with internal 12-bit ADC). **EasydsPIC4** has many features that make your development easy. Many of these already made examples in C, BASIC and PASCAL language guarantee successful use of the system. Ultra fast **USB 2.0** on-board programmer and **mikroICD** (In-circuit Debugger) enables very efficient debugging and faster prototype developing.

EasyARM Development Board

Complete Hardware and Software solution with on-board USB 2.0 programmer

EasyARM board comes with Philips LPC2214 microcontroller. Each jumper, element and pin is clearly marked on the board. It is possible to test most of industrial needs on the system: temperature controllers, counters, timers etc. EasyARM has many features making your development easy. One of them is on-board USB 2.0 programmer with automatic switch between 'run' and 'programming' mode. Examples in **C** language are provided with the board.

EasyAVR4 Development Board

with on-board USB 2.0 programmer

The system supports **8, 20, 28 and 40 pin** microcontrollers (it comes with ATMEGA16). Each jumper, element and pin is clearly marked on the board. It is possible to test most of industrial needs on the system: temperature controllers, counters, timers etc. **EasyAVR4** is an easy-to-use Atmel AVR development system. Ultra fast **USB 2.0** on-board programmer enables very efficient and faster prototype developing. Examples in **BASIC** and **Pascal** language are provided with the board.

Easy8051B Development Board

with on-board USB 2.0 programmer

System is compatible with **14, 16, 20, 28 and 40 pin** microcontrollers (it comes with AT89S8253). Also there are **PLCC44 and PLCC32** sockets for 32 and 44 pin microcontrollers. **USB 2.0 Programmer** is supplied from the system and the programming can be done without taking the microcontroller out.

LV 18FJ Development Board

Complete Hardware and Software solution with on-board USB 2.0 programmer and mikroICD

System supports 64, 80 and 100 pin **PIC18FxxJxx** microcontrollers (it comes with PIC18F87J60 - PIC18 Microcontroller with an integrated 10Mbps Ethernet communications peripheral, 80 Pin Package). **LV 18FJ** is easy to use Microchip PIC18FxxJxx development system. **USB 2.0** on-board programmer with **mikroICD** (In-Circuit Debugger) enables very efficient debugging and faster prototype development. Examples in **C**, **BASIC** and **Pascal** language are provided with the board.

dsPICPRO 3 Development Board

Complete Hardware and Software solution with on-board USB 2.0 programmer and mikroICD

The system supports dsPIC microcontrollers in 64 and 80 pins packages. It is delivered with dsPIC30F6014A microcontroller. **dsPICPRO3** development system is a full-featured development board for the Microchip dsPIC MCU. dsPICPRO3 board allows microcontroller to be interfaced with external circuits and a broad range of peripheral devices. This development board has an on-board USB 2.0 programmer and integrated connectors for MMC/SD memory cards, 2 x RS232 port, RS485, CAN, on-board ENC28J60 Ethernet Controller, DAC etc...

BIGPIC4 Development Board

Complete Hardware and Software solution with on-board USB 2.0 programmer and mikroICD

Following tradition of its predecessor BIGPIC3 as one of the best 80-pin PIC development systems on the market, **BIGPIC4** continues the tradition with more new features for the same price. System supports the latest (64) and 80-pin PIC microcontrollers (it is delivered with PIC18F8520). Many of these already made examples in **C**, **BASIC** and **Pascal** language guarantee successful use of the system. Ultra fast on-board programmer and **mikroICD** (In-circuit Debugger) enables very efficient debugging and faster prototype developing.

BIGAVR Development Board

with on-board USB 2.0 programmer

The system supports 64-pin and 100-pin AVR microcontrollers (it is delivered with ATMEGA128 working at 10MHz). Many already made examples guarantee successful use of the system. **BIGAVR** is easy to use Atmel AVR development system. BIGAVR has many features that makes your development easy. You can choose between USB or External Power supply. BIGAVR also supports Character LCD as well as Graphic LCD.

EasyPSoC3 Development Board

with on-board USB 2.0 programmer

The system supports **8, 20, 28** and **48 pin** microcontrollers (it comes with CY8C27843). Each jumper, element and pin is clearly marked on the board. **EasyPSoC3** is an easy-to-use PSoC development system. On-board **USB 2.0** programmer provides fast and easy in-system programming.

Please visit our website for more info http://www.mikroe.com

SOFTWARE AND HARDWARE SOLUTIONS FOR EMBEDDED WORLD

PR4401

Shine on, old Light a white

Burkhard Kainka

LED lighting is all the rage! Of course, that means there are now countless designs available for LED drivers: a particularly simple and practical solution is provided by the PR4401. In conjunction with PREMA Semiconductor and Würth Electronics (who provided the components), Eurocircuits and ECS Electronics (who manufactured and populated the printed circuit board), Elektor is pleased and proud to include a free gift with this issue: a board containing an LED booster circuit which you can try out for yourself. Although tiny, the board contains a complete high-efficiency 500 kHz voltage converter which will light an LED even from an almost flat battery.

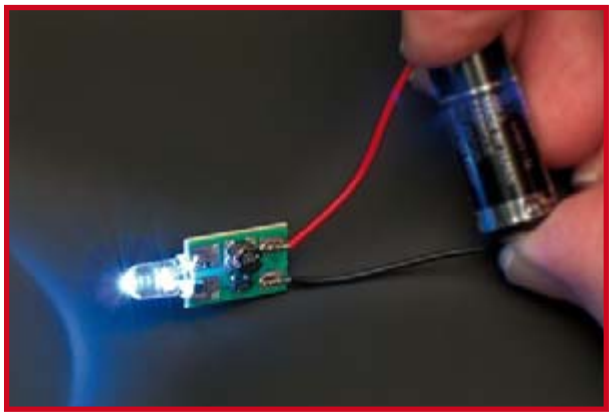

Figure 1. The free LED driver board in use.

All that remains for you to do is connect a single 1.5-V battery (dry cell) to one side of the board and a white LED to the other side (**Figure 1**). Even an almost flat battery will be fine, and the LED may also be a red or green type. It is even possible to connect two red, green or yellow LEDs in series. Whatever components are used, it is important to make the connection wires on both sides as short as possible.

... observing the correct polarity

The battery connections on the printed circuit board are marked '**+**' and '**–**'. One of the LED connections is marked with a 'C' to indicate the **c**athode pin. The legs of the LED usually have different lengths, and the leg that's cut shorter is the cathode (remember 'C' stands for 'cathode' as well as for 'cut'!). There is also a small flat on the flange of the LED's package indicating the cathode side: helpful if you have already chopped the leads to length!

What will happen to the IC if you reverse the battery polarity? As you can demonstrate using an ohmmeter, there are diodes at the input to the IC: with an input voltage of –1.5 V these conduct, a current of 500 mA starts to flow, and the IC gets rather hot. We tried this for a few seconds, and the IC survived, but to be honest we might not have been so lucky if we had prolonged the test —don't push your luck and try it at home.

The LED must also be wired the correct way round. Although the circuit should not be damaged by reversing the connection, the LED may well be, as it will be subject to high voltage pulses exceeding its rated reverse voltage. In the course of making similar mistakes we have observed that some white LEDs are very fragile in the face of this kind of treatment. The result of so-called reverse breakdown in the LED is that its efficiency is considerably reduced, and a relatively low resistance can be measured in the reverse direction. There are also white LEDs that stand up rather better to high reverse voltages. Manufacturers tend to be quiet on this topic, and all in all it is best just to make sure that you wire the LED correctly first time.

For decoupling it is possible to connect an additional 100-nF ceramic capacitor across the battery connections on the printed circuit board (**Figure 2**). The capacitor improves the efficiency of the LED driver if the battery has a relatively high internal resistance or if long connection wires are used. Even with a 100-nF ceramic capacitor and 50 cm of wire between battery and IC, we measured a ripple of 0.5 V_{pp} at 500 kHz at the IC input. At this frequency

LED Driver

batteries!
LED from only 0.9 V!

a 100-nF capacitor has a reactance of 3 Ω. When using long wires, it is better to use an even larger capacitor, for example a tantalum type with a capacitance of at least 1 µF. Polarity is also very important here, as tantalum capacitors cannot withstand reverse connection.

A little theory

Why do we need an LED driver circuit? Of course, if the supply voltage available were high enough, a simple series resistor would do the job: see the example LED characteristic curves shown in **Figure 3**. A modern red LED starts to light at a voltage of around 1.5 V. For other colours, the forward voltage is rather higher, and a white LED generally requires approximately 3.6 V, and so at least this voltage is required in the driver circuit. For example, an LED can be powered from a series combination of three AA-size 1.5-V cells giving a total voltage of 4.5 V.
If we use rechargeable cells, a further problem arises. When the battery is deeply discharged the polarity on the flattest cell in the pack will be reversed and the resulting current flow sharply decreases its life.
A more practical, more compact and more economical driver can be made if we run the LED from a single cell. One solution is presented by our tiny printed circuit board which replaces the series resistor by a PR4401 and an inductor, and which can work from a supply voltage from 1.5 V all the way down to 0.9 V.

Voltage converter

To drive the white LED we need to provide a voltage of at least 3.6 V at a specified maximum current. For operation from an ordinary 1.5 V cell or a 1.2 V rechargeable cell (NiCd or NiMH) we therefore require a voltage converter with integrated current limiting circuit. PREMA Semiconductor produces just such an IC, the PR4401, which has only three pins and which requires the addition of a single external component, a miniature coil with an inductance of between 10 µH and 22 µH: see **Figure 4**. The device comes in a tiny SOT23 package which means that the total printed circuit board area occupied by the driver is minuscule, making the device ideal for use in hand torches and similar applications.
The LED current is determined by the choice of coil. The device datasheet lists a selection of suitable coil values and the corresponding currents. For higher output currents a sister device, the PR4402, is also available.
If a 22-µH coil is used, the PR4401 delivers a diode cur-

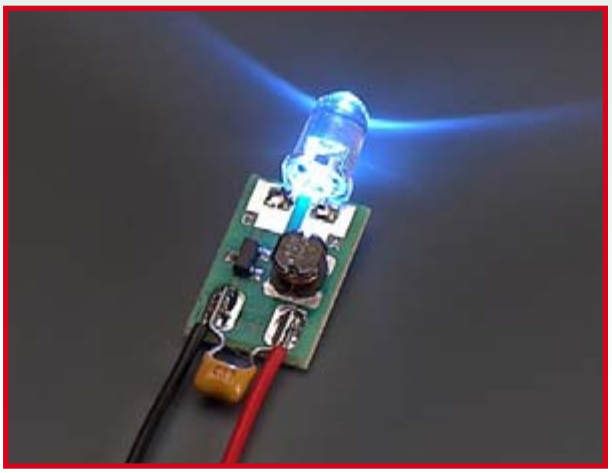

Figure 2.
Adding a decoupling capacitor.

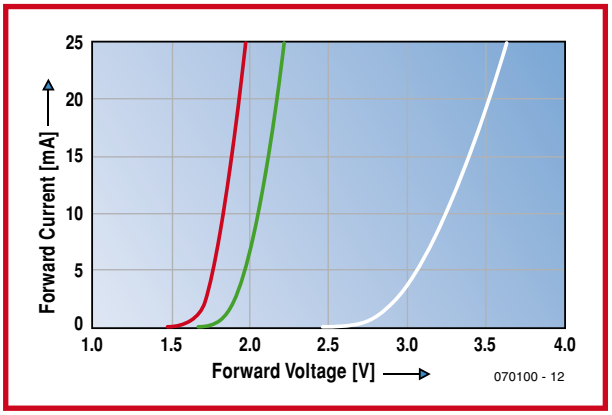

Figure 3.
Typical characteristics of red, green and white LEDs.

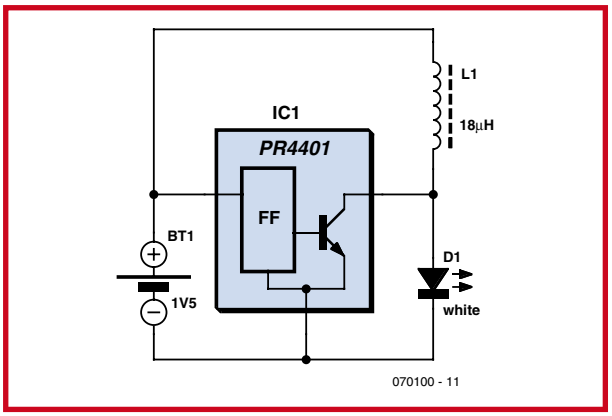

Figure 4.
Basic circuit of the switching converter.

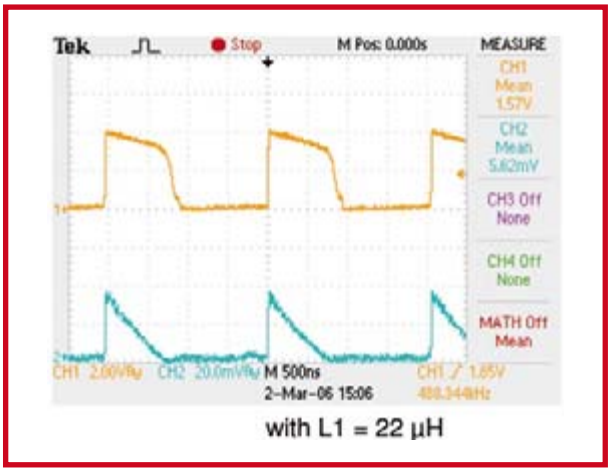

Figure 5.
LED current and voltage.

rent of approximately 12 mA; with a 10-µH coil, the current is around 23 mA. Our printed circuit board comes fitted with an 18-µH inductor, which gives a good compromise between LED brightness and battery life. LED brightness is practically constant over input voltages ranging from 0.9 V to 1.5 V; however, the input current does of course increase as the voltage drops. The oscilloscope trace (**Figure 5**) shows the LED voltage and current: as you can see, high-frequency pulses of energy are stored in the coil and then delivered at higher voltage to the LED.
What makes the PR4401 tick? The basic principles of operation are discussed in the datasheet, although details of the internal circuit are not given. The circuit essentially consists of a switching transistor and associated control logic (**Figure 6**).
To understand the circuit better, we replaced the LED with a 47 Ω resistor and monitored the output signal at various input voltages using an oscilloscope. The NPN output transistor is turned on to start the storage of energy in the coil: the 'charge phase'. The length of this period determines the total energy stored. Then, when the transistor is turned off the coil delivers this stored energy into the load: the 'discharge phase'. The comparator detects the end of the discharge phase when the output voltage V_{out} falls below a threshold value of 2 V. A new charge phase then

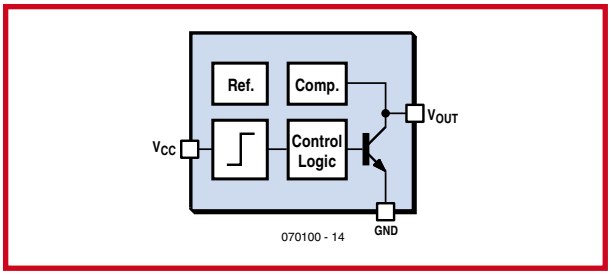

Figure 6.
Simplified block diagram of the PR4401.

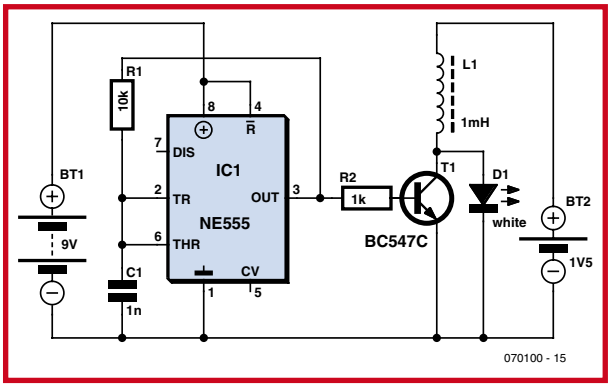

Figure 7.
Experimental LED driver using an NE555.

starts. As the battery voltage falls the length of the charge phase is increased so that on average the same power is delivered to the LED. But how does the device keep the LED brightness constant when it apparently does not have a way to measure the LED current?
To help understand the IC's operation, we built a single squarewave generator around an NE555 for comparison. The circuit drives an NPN transistor (see **Figure 7**). As far as T1, L1 and LED D1 are concerned the circuit is essentially the same as that using the PR4401; however, whereas the NE555 requires a relatively high supply voltage, PREMA have managed to replicate its control function in an integrated circuit that can run on just 0.9 V. Our reference circuit also does not take its supply voltage into account, with the result that as the battery voltage falls, the LED dims. For reasons we shall look at later, the switching frequency of our circuit is set to 50 kHz rather than 500 kHz. At 50 kHz and a (nominal) mark-space ratio of 50 % the charge phase lasts 10 µs. During this period the current through the coil I_c rises linearly to a final value of 15 mA:

$I_c = U \times t / L$
$I_c = 1.5\ V \times 10\ \mu s / 1\ mH$
$I_c = 15\ mA$

Now, suppose that when the transistor is turned off the voltage across the LED is 3 V and therefore the voltage across the coil is –1.5 V. This current will fall linearly from 15 mA to zero in 10 µs. The average current drawn from the battery is 7.5 mA, and the average LED current is 3.75 mA. So much for theory; in practice things are a little different. For example, if the input current is noticeably higher than expected, it might be that the coil is saturating for part of each cycle. This reduces its effective inductance and the current rises more rapidly, with an adverse effect on the efficiency of the circuit. Switching losses must also be taken into account. In the charging phase there will be a voltage between the collector and emitter of the transistor, with corresponding power dissipation in the transistor. The transition to the discharge phase will also not be instant: there will be a period during which a collector current will flow as the voltage starts to rise, resulting in further power losses. This is the reason that the NE555-based circuit works better at lower frequencies. Because the PR4401 is capable of operating at 500 kHz, it is able to make use of a smaller coil and deliver greater efficiency.

Coil crisis

The inductor has a reputation as the most fearsome component in electronics, although superficially one might think that winding a bit of wire into a helix could hardly give rise to any difficulties. However, air-cored coils are large and potentially have a high DC resistance, and so we need to move to a magnetic core to reduce the number of windings needed. Now we have to consider questions of correct dimensioning and selection of materials, as otherwise the losses will be great and the coil will heat up. The core material must be selected to suit the frequency being used; and if the core is too small, it is in risk of going into saturation.
The fixed inductor that we use here is kindly provided by Würth Electronics. Despite its small size it is in fact somewhat larger than strictly necessary for this application. This means that the DC resistance is low, the saturation current is high and losses overall are low. After making an extensive series of measurements we selected the SMD

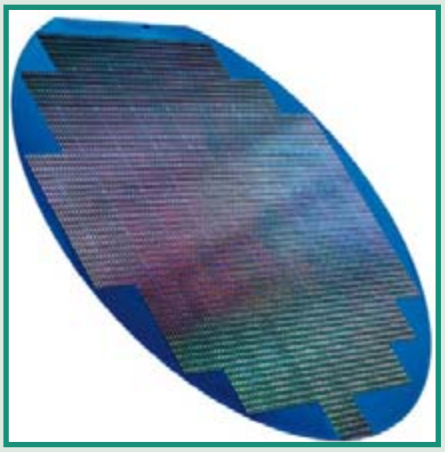

PREMA Semiconductor

PREMA Semiconductor began life in 1970 developing and manufacturing precision instrumentation equipment. Since 1977 PREMA has been making integrated circuits in a dedicated facility in Mainz, Germany. A new 150 mm wafer line was installed in 1996 with a production throughput of up to 100 wafers per day. The line is used to produce custom ICs, or ASICs (Application-Specific Integrated Circuits), for industrial and domestic applications including barcode readers, motion detectors and audio amplifiers.

Since spring 2006 PREMA has been making its devices available on the open market. This includes the LED driver IC, manufactured using the ModuS U6 process, which employs eight production layers including a single metallisation layer. The first five layers involve the production of N- and P-doped regions in the raw silicon wafer to create diodes, transistors and resistors. The next layer provides an insulator between these and the metallisation that will follow. The wafer is then sputtered with aluminium, which is etched away to form the tracks. For complex projects two or three metal layers are possible, separated by insulating layers and interconnected by contact vias.

Subsequent passivisation (normally using a silicon oxide layer) protects the circuit from oxidation and impurities. The (unpassivated) pads are then bonded either to leads for packaging (in the case of the PR4401 an SOT23-3 package is used), or the die can be directly mounted on a printed circuit board. Depending on the size of the circuit, between 2000 and 15000 dice are made on a single wafer. The wafer is sawn into the individual dice for packaging. Each die is tested against its specification both on the wafer and after packaging.

At the moment PREMA is in the process of qualifying its new 200 mm wafer BiCMOS production line.

Web Link: http://www.prema.com

Würth Electronics

The name of Würth has long been associated with screws, and fixings and mountings still form a central part of the operations of the company that started as a hardware shop run by Adolf Würth and which now employs some 60000 staff worldwide. The Würth Elektronik group now employs around 6700 staff in the fields of printed circuit board manufacture, power distribution, backplanes, solar technology and, last but not least, connectors and inductors. A particular milestone is the first mass production of so-called 'silicon free' multi-layer copper-indium-diselenide (CIS) solar cells in the world.

The inductor used on the LED driver board is made by Würth Electronics eiSos, a specialist in passive and electromechanical components, in particular in inductive components, connectors, and EMC and ESD protection. Würth places a high value on 'designer friendliness', with free samples, small-quantity ordering, design support and design kits, free seminars and applications handbooks entitled 'ABC of Transformers' and 'Trilogy of Inductors', which are available in several languages. As the only European manufacturer of chokes Würth devices feature in reference designs by the major switching regulator manufacturers, including Linear Technology, National Semiconductor, Texas Instruments, ON Semiconductor, STMicroelectronics, Diodes, MPS, Maxim, Semtech and Sipex.

Web Link: http://www.we-online.de

Printed circuit boards, quantity 150,000

The LED driver board was planned as a free gift with the editions of ***Elektor Electronics*** published worldwide (English edition), in Germany, France, the Netherlands, Spain and Greece, which have a total circulation of around 150,000 copies. How does a magazine publisher go about getting this many boards manufactured and populated?

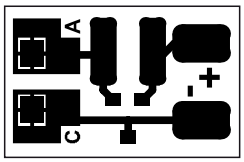

1
200%

Of course, we needed not only the components from PREMA Semiconductor and Würth Electronics, but also a printed circuit board manufacturer and assembler. Board manufacture was done by ***Eurocircuits***, whose proven quality will be familiar to ***Elektor Electronics*** readers through The PCBShop service. ***ECS Electronics and Component Service*** in Geel, Belgium populated the boards.

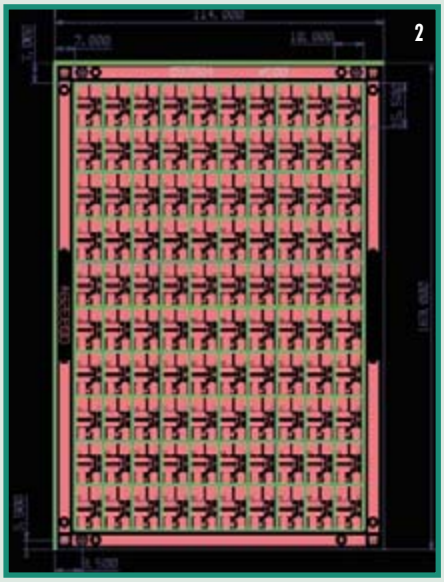
2

We started by designing the single-sided printed circuit board layout for the two SMD components (***Figure 1***) in our laboratories here at ***Elektor Electronics***. With dimensions of 10 mm by 15.5 mm it was not practical to make 150,000 units individually: more on that below.

Then we went to Eurocircuits. They performed initial checks on the board design (provided by us as a Gerber file): that the file could be read correctly, that the dimensions were accurate, and that the board was manufacturable. An extra solder mask was added to the unpopulated side of the board to increase the contrast and hence legibility of the logo to be printed on it. To make populating the boards practical, a panel consisting of one hundred boards in a ten-by-ten array was laid out as a single large board with a border for reinforcement (***Figure 2***). The border also carried fiducial (reference) marks. The panel was scored in a horizontal and vertical grid using a V-cut machine to simplify separating it into individual boards after population. The boards were then manufactured in the Eurocircuits factory (***Figure 3***), and the result, 1,500 panels like the one shown in Figure 2, were sent to ECS for population.

The copper surface of the boards went through a lead-free hot air levelling process using Sn100. ECS then screen-printed a lead-free solder paste on to the board using an EKRA X1-SL machine and a 125-μm stainless steel screen.

The next step was the automatic population of the boards using a Samsung SV20 pick-and-place machine (***Figure 4***), which can fit ten thousand 0603-style SMD components per hour. Before starting on each panel, the machine used a vision system to register the position of the fiducial marks so that the position of each board was exactly known. The machine at ECS is easily adapted to a new design and so is even suitable for short production runs and prototypes.

Soldering was the next step, using a vapour-phase process which is ideal for SMD printed circuit boards. By enveloping the boards in a heated atmosphere of protective gas oxygen is removed from the joints and the solder temperature can be controlled very precisely, which prolongs the service life of the components and boards.

After soldering the joints on each panel were checked using a Mantis optical inspection machine. Finally the panel came under the knife: 1,500 panels were chopped into 150,000 individual LED driver boards. And, assuming no accidents have happened on the way to your newsagent or doorstep, you should have received one with this issue, courtesy of Elektor, the world-leading magazine on electronics.

Web links: http://www.eurocircuits.com http://www.ecsgeel.com

3

4

WE-PD2 choke with an inductance of 18 µH. The data sheet gives a typical DC resistance of 0.225 Ω. The coil current may rise as high as 1.1 A, compared to the saturation limit of 1.29 A. The core is made of a nickel-zinc ferrite material which can operate with minimal losses even at high frequencies. A special enamelled copper wire permits high operating temperatures.
With an input voltage of 1.5 V the charge phase of the PR4401 lasts approximately 1 µs. From this we can work out the peak coil current:

$I_c = U \times t / L$
$I_c = 1.5\ V \times 1\ \mu s / 18\ \mu H$
$I_c = 83\ mA$

Making the approximation that the LED voltage is 3 V, we arrive at an average LED current of approximately 20 mA and a battery current of approximately 40 mA. At the end of the charging phase the voltage drop across the coil is only about 10 mV. From this we can see that the chosen coil is capable of delivering considerably more current than it does in this circuit. According to the datasheet, the efficiency of the converter circuit is 80 % even when using a smaller coil; with the 18 µH coil we have selected, we can expect even higher efficiency.

Applications

The LED driver is neither a constant voltage source nor a constant current source, but rather something in between. It can be thought of as a constant power source. For the given component values it will always deliver approximately 70 mW into the connected load, to a large extent independent of the input voltage and of the load resistance. If the connected LED requires a higher voltage, the current will reduce accordingly; it is therefore possible, for example, to connect more than one LED in series to the output of the circuit. For example, a white and a green LED could be used in series with a total voltage of about 5.5 V. According to the data sheet the limit is at 15 V. Open-circuit operation is also possible, and measurements show that the output voltage is limited to about 18 V by a zener diode inside the IC.
The LED receives a pulsed current from the driver circuit. LED data sheets state that the expected efficiency of the LED is greater if a constant current is used. With the assistance of a rectifier diode and an electrolytic smoothing capacitor we can reduce the ripple in the LED current (**Figure 8**). It is not essential to use a Schottky diode here as the PR4401 will make up for the voltage drop across the diode by suitably increasing its output voltage. However, the power loss in a Schottky diode will be less than in a 1N4148 (about 14 mW), but a difference of a few milliwatts will not make much difference to the brightness of the LED.
A further possible application is to use the circuit as a battery charger (**Figure 9**). For example, a NiCd or NiMH cell (with a charge voltage of up to 1.45 V) can be charged from two, or preferably three, solar cells with a total nominal voltage of 0.9 V or 1.35 V respectively. Since the PR4401 automatically adjusts the output voltage up to a maximum of 15 V, it is possible to connect a 9-V or 12-V battery consisting of a number of NiCd or NiMH cells in series to the output. The current will be limited to approximately 20 mA, and so the circuit would be a good match for a small 3.6-V battery with a capacity of 200 mAh or a 9-V battery with a capacity of 150 mAh. For higher capacity batteries the PR4401 might be suitable in a trickle-charging application, and for currents of

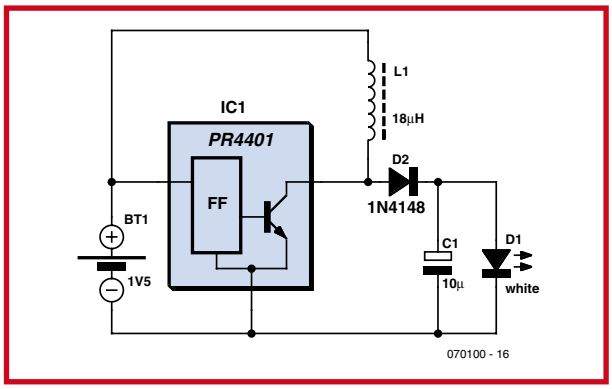

Figure 8.
Circuit using a rectifier diode and smoothing.

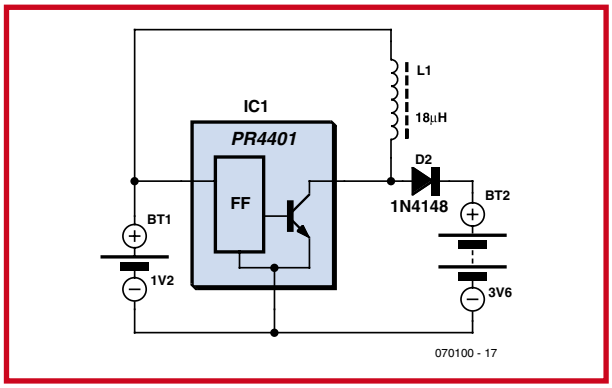

Figure 9.
Charging a battery from 1.2 V.

up to 40 mA the PR4402, also made by PREMA Semiconductor, is worth considering.
There are of course many other application possibilities for these two ICs. Let your imagination run free (and wild!) and with a little technical know-how and skill with the soldering iron you should be able to come up with plenty of creative ideas! We will publish the best ideas we receive on the *Elektor Electronics* website and in the pages of the magazine.

(070100-I)

Weblinks

[1] PREMA PR4401 and PR4402 LED driver ICs:
http://www.prema.com/Application/whiteleddriver.html

[2] PR4401 data sheet:
http://www.prema.com/pdf/pr4401.ppdf

[3] Würth WE-PD2 SMD power inductors, including data sheet (order code 744773118):
http://www.we-online.com/website/emc/eisos/alg/kat_layout.php?id=28

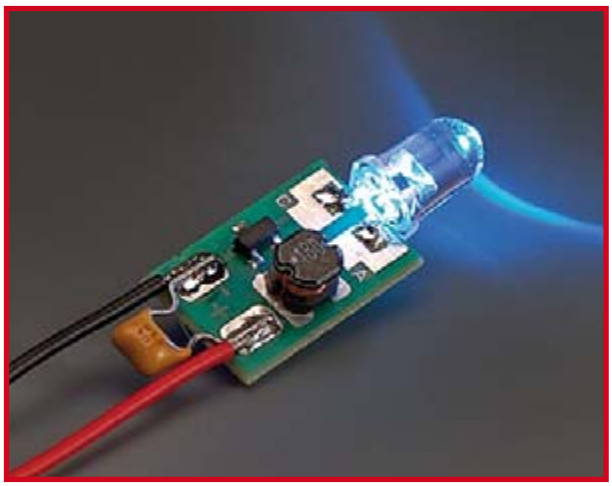

Digital Inspector

Four-channel logic analyser

Ronald de Bruijn

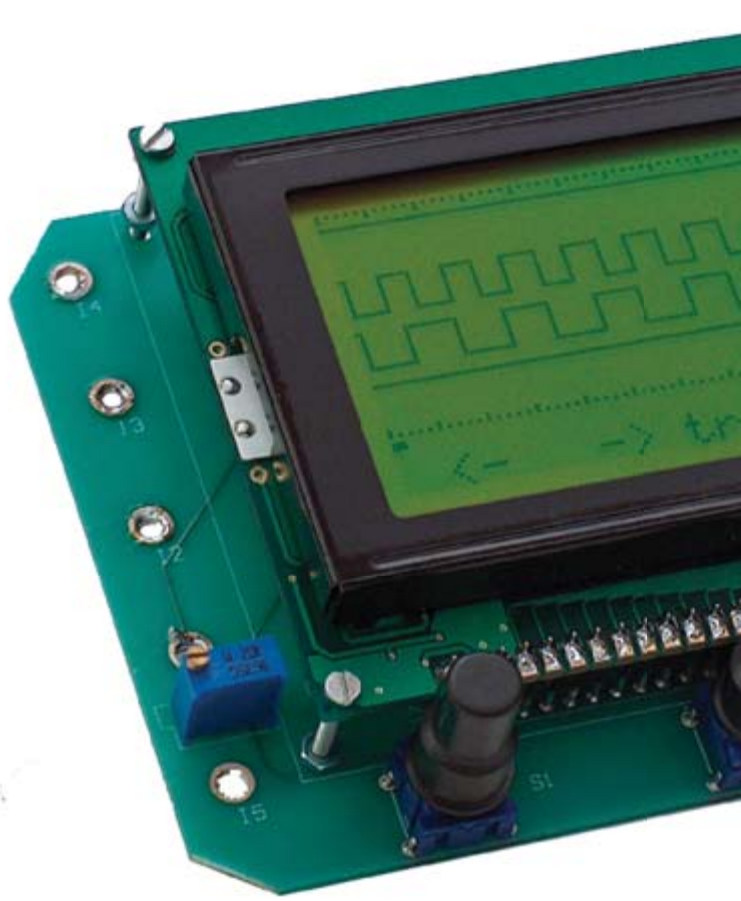

When checking digital signals a logic analyser is indispensable, especially since many circuits use microcontrollers these days. In this article we describe an easy to build circuit that can cope with most digital signals and also has a memory function.

Specification

Sample frequency: 200 Hz-2 MHz
Channels: 4
Range: 0 to 5 V
Memory: 1024 samples per channel
Trigger levels: +Ve and –Ve
Trigger pattern: can be set for each input
Dot matrix LCD: 64 x 128 pixels
Supply: 9 V PP3 battery

The best way to inspect digital signals is with a logic analyser. Sometimes it's useful to be able to do this on-site, or you may have to take a 'floating' measurement. The four-channel logic analyser described here is suitable in both situations due to its compactness and because it can be battery powered. The maximum sampling rate is 2 MHz and the circuit has sufficient memory to store 1024 samples of the signal. The dot-matrix display with a resolution of 64 by 128 pixels shows a clear representation of the digital signals.

Schematic

At the heart of the circuit is IC2 (a PIC18F4850, see **Figure 1**). This PIC controller samples the signals and drives the display. It is controlled via five push buttons (S1 to S5). The crystal (X1, 10 MHz) determines what the maximum sampling rate is. The internal PLL of the microcontroller is used to give the controller an internal clock frequency of 40 MHz, which is the maximum frequency recommended by Microchip for this type of chip.

Diodes D1 to D8 protect the inputs against too high or negative voltages. The input signals are fed to IC1, a 74HC04N, which is used as a buffer. The fact that the signals are inverted doesn't matter in this case, since we can easily convert the signals back via the software. The signals go directly from the buffers into the controller via RA1 to RA4, where the software takes over (see *Control*).

Preset P1 is used to set the contrast of the display and T1 turns on the background light of the display. Bz1 gives an audible warning when a new sampling cycle starts and when you change between run and hold mode. The five switches used to control the circuit don't require a hardware debounce circuit, since this is taken care of by the software.

The power supply for the circuit consists of two parts: a stabilised 5 V supply and a 9 V supply for the display light. The source for these voltages can either be a 9 to 12 V mains adapter or a 9 V rechargeable battery.

A simple charging circuit for the battery is also included (T2, R1, R17, D12), which comes into action whenever a mains adapter is connected. Assuming a standard LED with a forward voltage drop V_f of 1.5 V is used, the charging current for the battery will be:

$(1.5 - 0.6) / 56 = 16$ mA.

A 9 V NiMH battery with a capacity C of 170 mAh is then charged at about 0.1 C, so no damage will occur if it is charged continuously. The battery will be fully charged in about 10 hours with this circuit. During the charging LED D12 will be on. If an ordinary (non-rechargeable) battery is

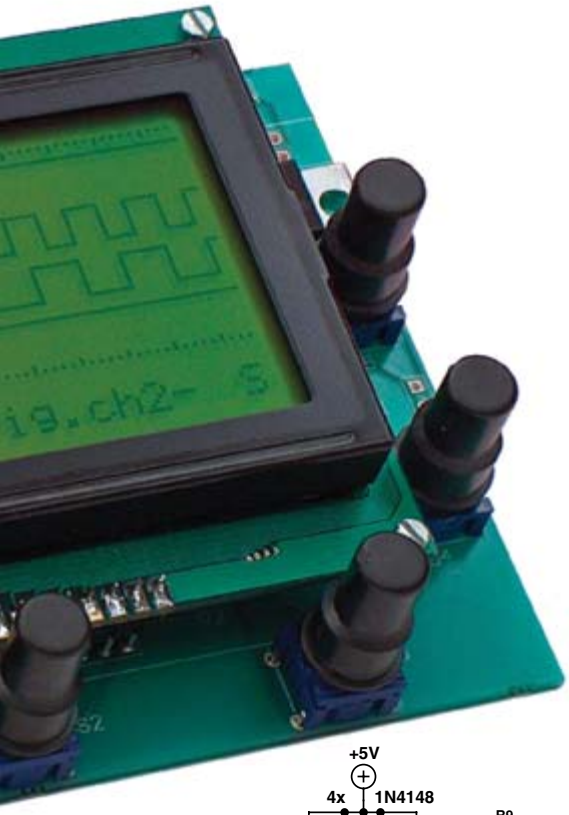

used, the circuit around T2 can be left out.

Control

Switch S1 is used to select the sampling frequency. The rates that can be selected are 5/10/20/50/100/200/500 µs/div and 1/2/5 ms/div. S2 selects the channel that is used to trigger the circuit. S3 is used to tell the PIC if it is to trigger on a rising or falling edge and S4 can arm and stop the circuit, or clear the display. One short press of S4 arms the circuit. After the trigger signal occurs it will take 1024 samples per channel and store them. Pressing S4 briefly again will make the circuit read in a new set of 1024 samples after the next trigger signal. When S4 is held down for longer the display is cleared. The last settings for the sampling frequency, the trigger channel and the trigger condition are stored inside the EEPROM of the microcontroller. These settings are then used as the initial state when the circuit is next turned on.
S5 turns the backlight on or off. After

Figure 1. From the circuit diagram it is clear that the microcontroller takes care of just about everything.

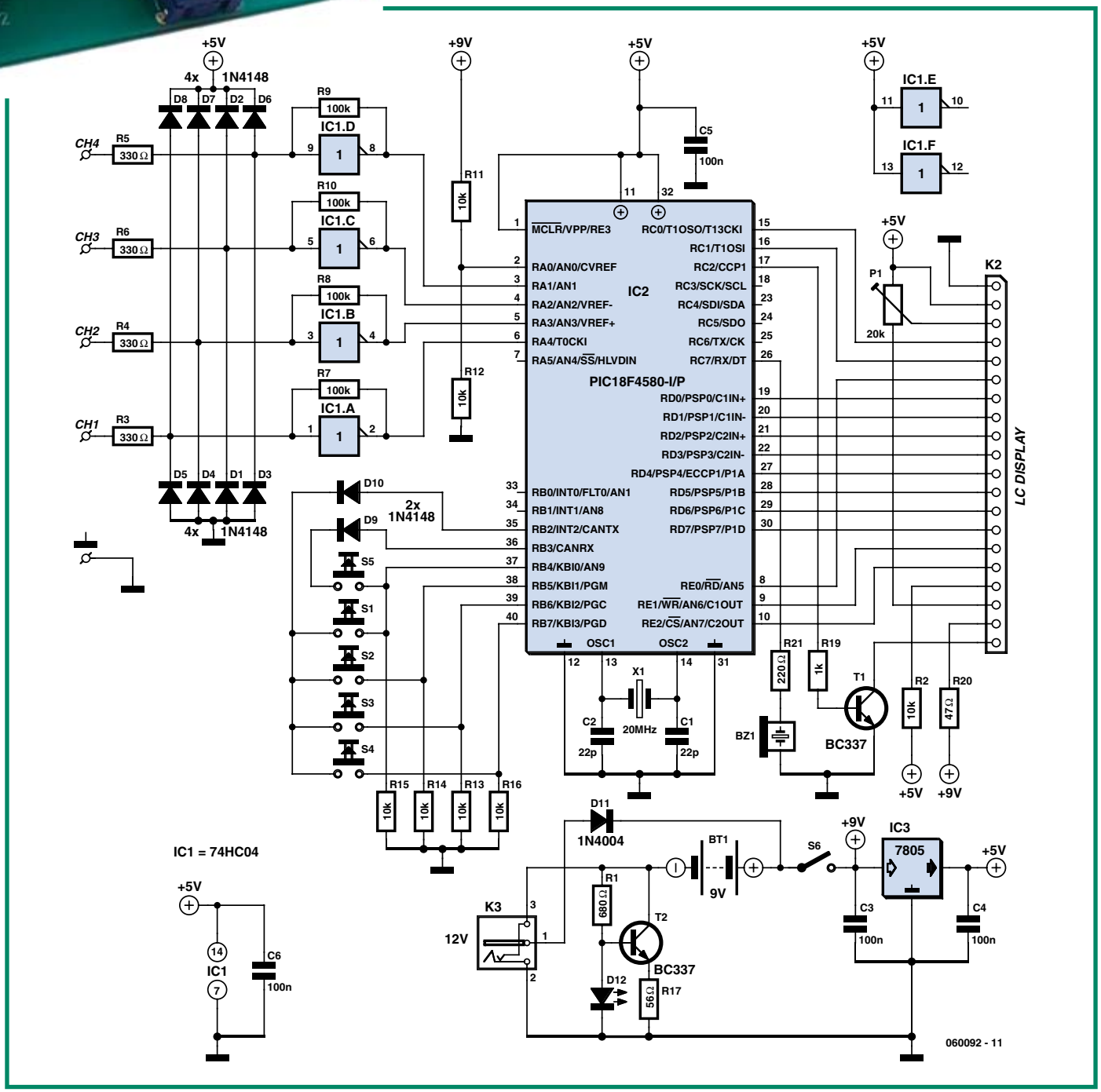

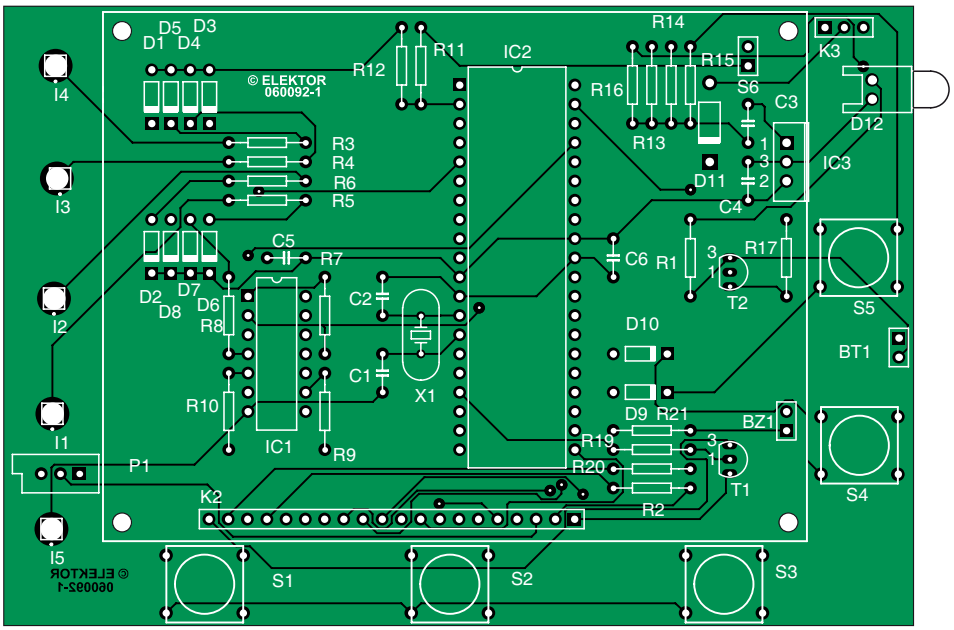

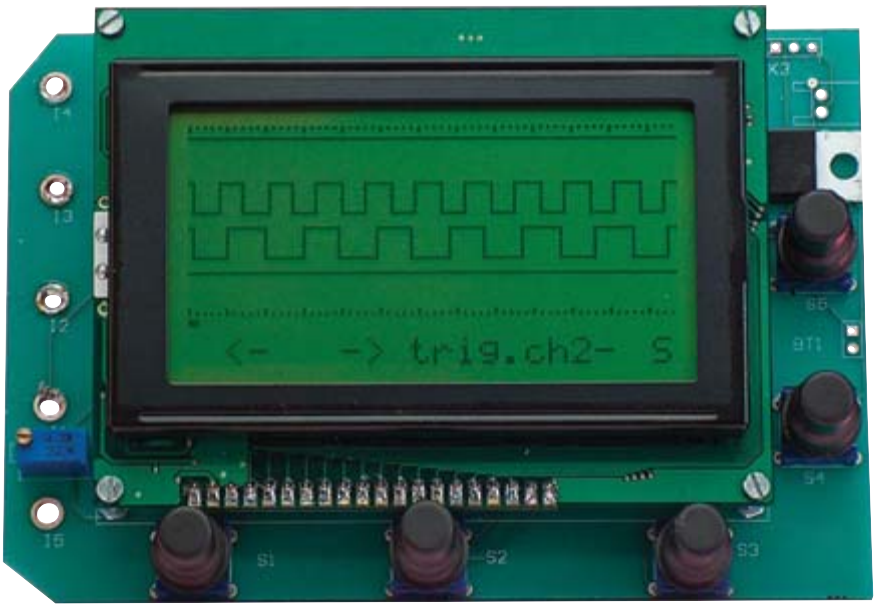

Components list

Resistors
R1 = 680Ω
R2,R11-R16 = 10 kΩ
R3-R6 = 330Ω
R7-R10 = 100kΩ
R17 = 56Ω
R19 = 1kΩ
R20 = 47Ω
R21 = 220Ω
P1 = 20kΩ preset, multiturn, vertical mounting

Capacitors
C1,C2 = 22pF
C3-C6 = 100nF

Semiconductors
D1-D10 = 1N4148
D11 = 1N4001
D12 = LED, 5mm diam.
T1,T2 = BC337
IC1 = 74HC04
IC2 = PIC18F4580-I/P, programmed, Elektor SHOP # 060092-41
IC3 = 7805

Miscellaneous
Bz1 = AC buzzer
X1 = 10MHz quartz crystal
Graphic LC display, 128 x 64 pixels, e.g. DEM128064A or NLC128x64 (Conrad Electronics # 187429)
Case 186 x 123 x 41mm with compartment for 9V battery, e.g. Strapubox (Conrad Electronics # 522775)
S1-S5 = pushbutton Multimec RA3FTL6 w. knob AQC09-24.2
S6 = on/off switch
9-V battery clip
5 wander sockets, screw mount (for connection to I1-I5)
Kit of parts incl. case: Elektor SHOP # 060092-71
PCB layout: free download from www.elektor.com, file # 060092-1

Figure 2. As can be seen from the component layout, the construction of the circuit isn't difficult. Connector K2 is placed such that the display can be mounted directly above the double-sided PCB.

about one and a half minutes, or when in a 'Lo_Batt' condition, the microcontroller automatically turns off the backlight.

Operation

In order to obtain the highest possible sampling rate we initially let the microcontroller store the samples in its RAM when the trigger event occurs. For this we use the following software instruction: *movff port a, postinc0*. This instruction copies the contents of port a to the RAM and increments the RAM address by one. This cycle is then repeated 1024 times. At the end of this, 128 samples are read from the RAM and shown on the display. This process is repeated once a second.

If no new trigger event occurs for about three seconds (depending on the sampling rate), the circuit reads in 128 samples and shows them on the LCD. In this way we can tell what condition (high or low) the inputs are.

A quick press of S4 turns on the memory function. This is indicated by an 'R' on the right of the screen. The circuit then waits for the trigger event. Once this has occurred and the 1024 samples have been stored the 'R' changes into an 'S' and the display shows the first 128 samples of each channel. Switches S1 and S2 can now be used to scroll through the memory. A short press of S1 or S2 causes small jumps through the memory; a longer press of S1 or S2 creates larger jumps. The cursor at the bottom of the display shows which area of memory is currently shown.

Another quick press of S4 makes the circuit read in a new set of samples and store them in memory. The display keeps showing the same area of memory as for the previous samples. This is of course very useful when you're studying the signals that follow a short

time after the trigger event.
If you hold down S4 a bit longer, until the buzzer gives a beep, the circuit reads in a new set of samples and stores them in memory. But this time the display won't show the same area of memory; instead it jumps right back to the beginning.
If you hold down S4 longer still (until you've heard two beeps), the logic analyser comes out of memory mode and returns to the standard mode where 128 'live' samples are always shown on the display.

Construction

In this design we haven't used any SMDs. The layout is fairly sparse, with all components easily accessible. The soldering should therefore not cause any problems.
We would like to come back to the connection between the display and the board. There is enough room above the board for the display. The easiest way to connect the display to the board is to first solder a single pin-header strip to the display board. Next, plug a wirewrap socket into this pin-header and plug the other end into the main board. Check that the display is at the right height and then solder the wirewrap socket to the main board.
When you use the recommended enclosure for this circuit you should first file off the corners of the board at the side of the input signals. The board will then fit perfectly.

Comments

When you're not using all of the channels it is advisable to connect the unused channels to ground. You'll often find that open inputs can pick up interference, which results in a garbled display.
It should be clear that this analyser is not suitable for use with very high frequencies. Applications for this device are found with 'slower' microcontrollers, serial communications, etc. Even so, this simple circuit can make your life a lot easier during the development of a digital (microcontroller) circuit.

For this project we're offering a complete kit of parts (order code **060092-71**), which consists of the display, the main board, a programmed microcontroller, the components and the enclosure. All that's left for you to do is solder the components to the board and mount it in the enclosure. After connecting a battery or mains adapter you can start analysing straight away.
For those of you who want to etch the board yourselves, the layout can be downloaded from our website at www.elektor.com, under file number **060092-1.zip**. And if you have the facility to program the PIC microcontroller, you can also download the source code from our site (file # **060092-11.zip**).

(060092-I)

Publicité

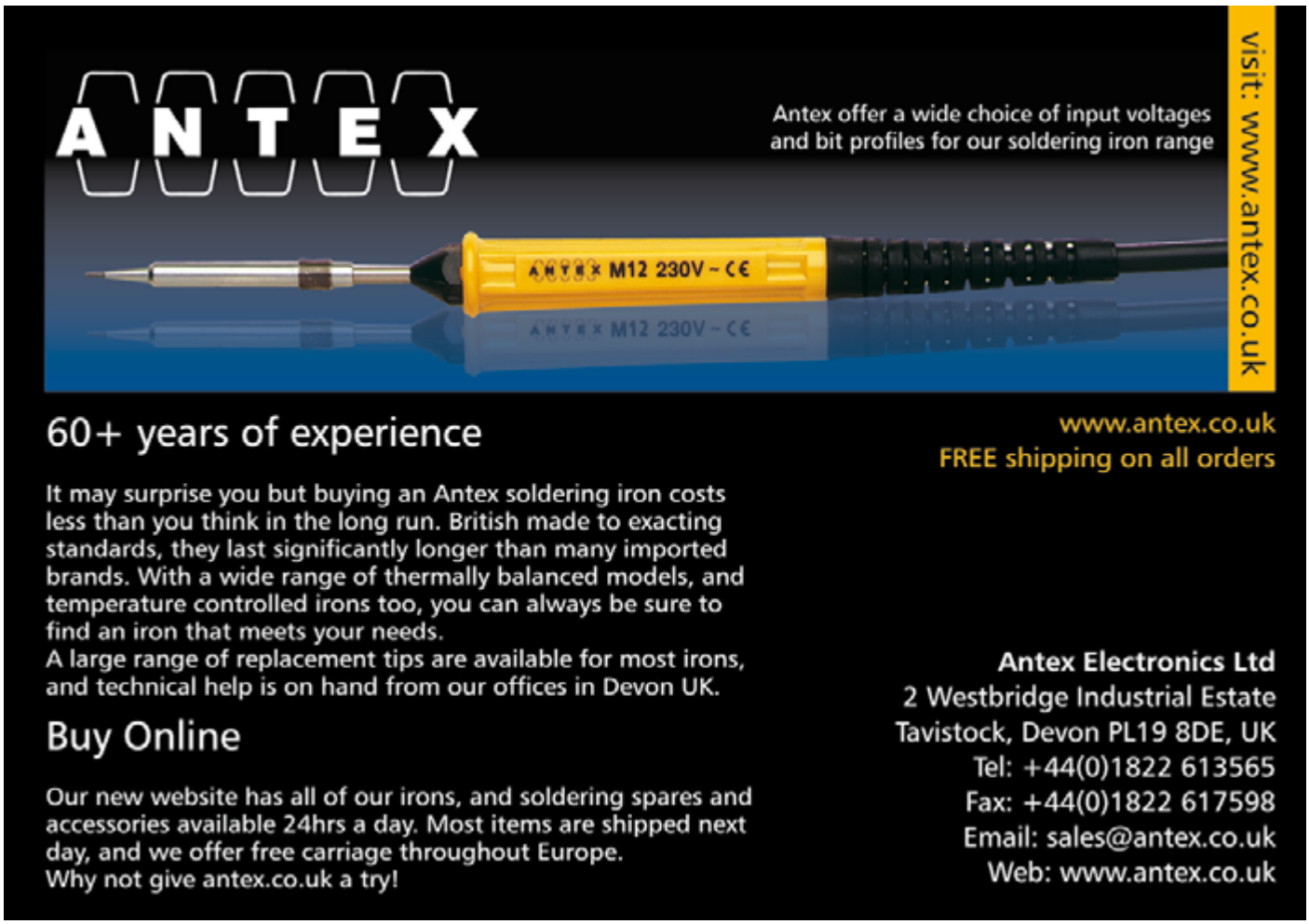

Tilt Gamepad

Upgrade your Gamepad with acceleration sensors

Xin Wang and Marko Westphal

Users of the Nintendo Wii and Play station 3 'tilt' controllers have raved about the more intuitive control these devices offer. Up until now there hasn't been a comparable gamepad available for the dedicated PC gamer but why should they be left out of all the fun? Join in by adding this two-axis tilt sensor to a standard gamepad, it is particularly good for vehicle and flight simulation as well as adventure games. Give those thumbs a rest and start waving your arms around!

A tilt gamepad senses the angle at which the handheld controller is moved and converts that measurement into equivalent digital outputs which would be produced by pressing the up/down left/right buttons on the gamepad. It is not necessary to press any of the buttons to control direction; the on-screen object is controlled simply by tilting the gamepad. In this design the movement is detected by an acceleration sensor manufactured by Analog Devices and sensor values are processed by an Atmel ATmega8 microcontroller. The entire circuit fits onto a small PCB which converts a standard gamepad into a tilt gamepad.

The sensor

The novel component in this design is the analogue acceleration sensor type ADXL322 from Analog Devices. This 2-axis device produces two independent output voltages proportional to the inclination of the sensor in the x and y planes. The supply voltage can be in the range of 2.4 V to 6 V. The two analogue output signals have a sensitivity of 420 mV/90°. The sensor range is ±2 *g* and it is supplied in an SMD CP-16 package which cannot be soldered into place using a conventional soldering iron so the PCB is supplied with this component already mounted.

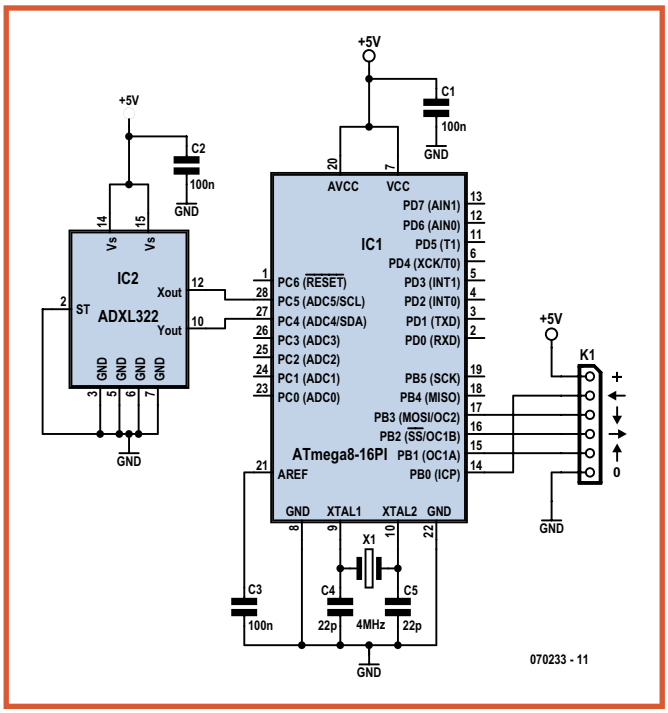

Figure 1. Besides the acceleration sensor and microcontroller there are very few other components required.

Signal processing

The output signals from the acceleration sensor are analogue so it is necessary to process them using a microcontroller with an on-board A/D converter. The Atmel ATmega8 is an 8-bit microcontroller with six multiplexed analogue inputs which can be selected internally as an input to the 10-bit resolution A/D converter. Up to 23 of its pins can be configured as general-purpose digital I/O pins.

The two analogue signals representing the *X*/*Y* tilt from the acceleration sensor are connected directly to the A/D converter inputs of the microcontroller. The signals are digitised, filtered and then converted into digital output signals which emulate the up/down, left/right function of the direction buttons on the original gamepad.

The X and *Y* values are sam-

pled alternately, the 2.56 V reference for the A/D converter is produced on-chip and decoupled by capacitor C3 on Pin 21 (AREF). The I/O pins have good sink/source current capability which together with selectable internal pull-up resistors means that there is no requirement for additional drivers for the output signals.

Simple circuitry

It can be seen in the circuit diagram in **Figure 1** that apart from the microcontroller and sensor there are very few additional components required. The layout of the double-sided PCB shown in **Figure 2** is therefore quite simple.
Figure 3 gives the flow chart describing the main software functions. The microcontroller ADC port is sampled every 10 ms, raw values of acceleration are converted into tilt values which are then filtered. The signals output by the gamepad depend on the direction of tilt and tilt angle.
The 6-way pin header (K1) is fitted to the PCB for all the connections to the gamepad. The circuit is powered directly from the USB interface (+5 V and ground).

Putting it together

The finished PCB can be fitted into the casing of a standard PC gamepad if sufficient space is available. In principle any gamepad can be used providing the direction buttons are 'active Low' i.e., when you press a button the output signal goes from a high to a low. The author used a 'Firestorm Digital 3' while in the *Elektor Electronics* lab a 'MAXFIRE G-08X4' from Genius happened to be available for conversion (it must have been used earlier by one of our team for some serious research work…).
In addition to the gamepad and finished PCB a short length of 6-core cable is required and possibly a small plastic enclosure for the finished PCB if it will not fit in the gamepad case. Do not insert the programmed microcontroller in its socket yet. The microcontroller can be ordered ready-programmed from the *Elektor Electronics* website. Alternatively, the hex file (object code) can be downloaded from the same website at no cost if you prefer to program the device yourself. The original source files are protected by licences and copyrights and are not freely available.
Assembly begins by first dismantling the gamepad; undo the screws at the

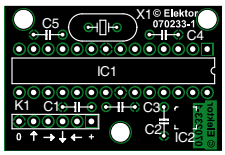

Figure 2. The double-sided PCB is supplied with the SMD-outline tilt sensor already mounted (near the bottom of the board).

Components list

Capacitors
C1,C2,C3 = 100nF
C4,C5 = 22pF

Semiconductors
IC1 = Atmega8-16PI, programmed, Elektor SHOP # 070233-41*
IC2 = ADXL322

Miscellaneous
K1 = 6-way SIL pinheader
X1 = 4MHz quartz crystal
PCB with ADXL322 sensor fitted, Elektor SHOP # 070233-91

* hex code file: free download # 070233-11.zip from www.elektor.com

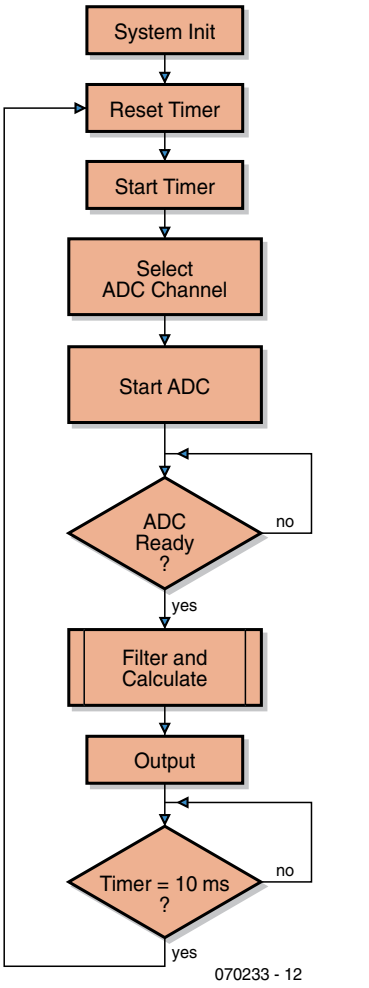

Figure 3. The software flow diagram. The sensor is sampled every 10 ms.

back of the unit which hold the two parts of the shell together. Once inside it is necessary to find out which parts of the circuit are connected to +5 V and which are connected to ground. The simplest method is to trace wires from the USB connection, pin 1 (usually black) is ground and pin 4 (usually red) is +5 V. Similarly check out the wiring to the gamepad buttons; a close inspection reveals that each of the direction buttons have two contacts, one of which is usually connected to ground (as in the Thrustmaster gamepad but some use +5 V for this connection) the other contact goes to the microcontroller. This contact will be used later to solder wires to the new PCB connector K1 pins 2 to 5. If it is necessary to mount the PCB externally in a small plastic enclosure (as is the case with the "Firestorm Digital 3"), a hole will need to be drilled in the rear of the gamepad housing (5 mm diameter

Gamepad/sensor board connections

Wiring between the gamepad and K1 on the sensor PCB using 6-core colour coded cable.

K1	GND	Up	Left	Down	Right	+5 V
Cable	Black	Orange	Yellow	Green	Blue	Red
Gamepad	Earth/Ground	Up	Left	Down	Right	+5 V

should be sufficient) to run the multicore cable through.

Wiring between the tilt PCB connector K1 and gamepad can now begin by soldering the wires +5 V, ground and the four direction button contacts.

The pin assignment for K1 is detailed on the circuit diagram in **Figure 1**. Pins 1 and 6 carry the power supply while 2 to 5 are the digital output signals wired to the direction button contacts (active low, the idle state is high).

The **Table** below shows the wiring connections in detail and the cable colours. Printed arrows on the PCB next to connector K1 indicate the direction in which the PCB should be moved to produce an output at that pin.

Once the wiring is complete the preprogrammed microcontroller can now be fitted in its socket on the PCB. The PCB can be secured in the gamepad using hot glue (roughen the internal surface of the housing for good adhesion) or if an external enclosure is used it can be attached externally to the rear of the gamepad again with hot glue. Screw the two halves of the gamepad together.

The tilt gamepad is now finished! The PC has no way of knowing that the gamepad internals have changed so it's not necessary to load any new software drivers. Revisit all your favourite games but this time experience a whole new level of intuitive control.

(070233-I)

How many pieces of test equipment can you buy for £99?

With a PoScope USB instrument you get the features of an oscilloscope, spectrum analyser, chart recorder, logic analyser (with UART, SPI, I²C and 1-wire serial bus decoding), pattern generator and square-wave/PWM generator. That's equivalent to six pieces of test equipment for £99 including UK delivery and VAT.

PoScope is a low-cost USB-based instrument that adds invaluable test equipment features to your desktop or notebook PC. Being PC-based, all measurements can be printed, copied to the clipboard and saved as text, bitmap or vector graphics for subsequent analysis or to import into other programs. PoScope is ideal for use by electronics hobbyists, students and engineers alike and is particularly suited to those developing with microcontrollers such as PIC and AVR.

PoScope provides the following operation modes:

- 2-channel oscilloscope with 100Hz to 200kHz sampling, -20V to +20V input range, 10-bit ADC resolution, absolute, differential and external triggering, adjustable pre-trigger and marker measurements.
- 2-channel spectrum analyser with klirr factor measurement, Hamming, Hanning, Blackman and Blackman-Harris FFT window functions.
- 2-channel chart recorder with 0.01Hz to 200kHz sampling, maximum, minimum and average voltage measurements for each channel and waveform record over several tens of hours.
- 16-channel (8 when pattern generator used) logic analyser with 1kHz to 8MHz sampling, versatile triggering with adjustable pre-trigger, external clocking, preset pulse miss, preset bit sequence/edge, decoding of UART, SPI, I2C and 1-wire serial interfaces.
- 8-channel 1kHz to 1MHz pattern generator with tabular waveform formatting or direct timing chart plotting on the screen.
- Square-wave/PWM (pulse width modulation) generator.

Compatible with Microsoft Windows ME, 2000 and XP, PoScope is supplied with easy-to-use software and a USB cable. Oscilloscope probes and logic analyser test lead/clip sets are available separately.

Order now on **Freefone 0800 612 2135**
or online at www.paltronix.com

PALTRONIX
EQUIPMENT FOR ELECTRONICS DEVELOPMENT, TRAINING & EXPERIMENTATION

Paltronix Limited
Unit 3 Dolphin Lane, 35 High Street, Southampton SO14 2DF
Telephone: 0845 226 9451 **Facsimile:** 0845 226 9452
Email: sales@paltronix.com **Web:** www.paltronix.com

All major credit and debit cards accepted

Ultras

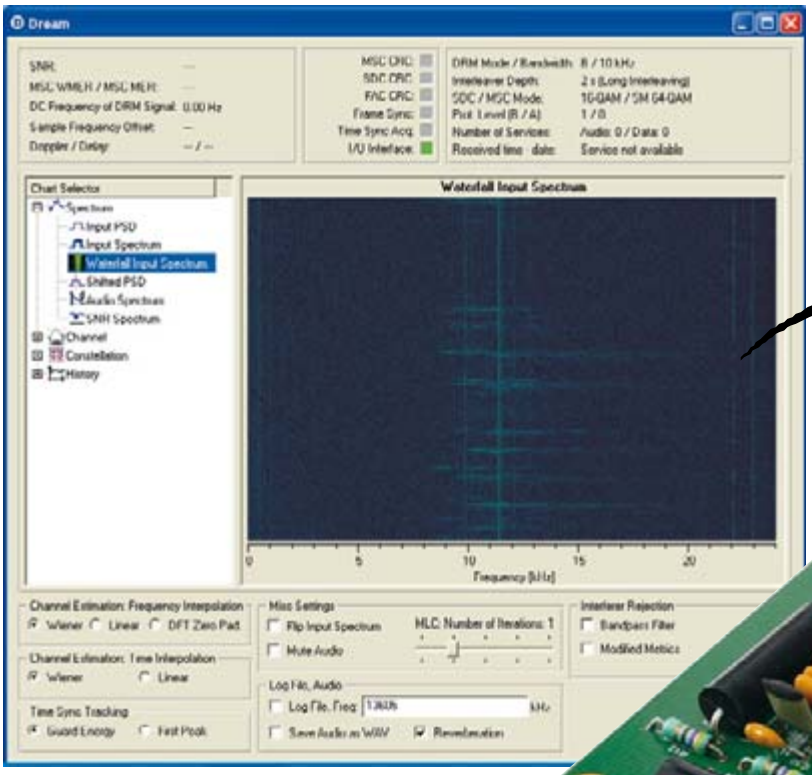

Burkhard Kainka

Although bats are common animals, it is rare to actually catch a glimpse of one. In the dark they are practically invisible, and their ultrasonic sounds are inaudible. However, using a balanced mixer, we can make an ultrasound receiver that allows us to hear these sounds. The Software Defined Radio (SDR) previously described in *Elektor Electronics* May 2007 makes an ideal starting point.

Among the living things that move upon the earth, the fowl of the air, and even among the creatures of the sea there are animals that can produce sounds with frequencies well in excess of 100 kHz. The most well-known are of course bats, with their phenomenal ability to navigate using ultrasound. Dolphins, whales, mice and insects also make use of high-frequency sound signals.

Many creatures also have a sense of hearing with a frequency response wider than that of humans. It is well known that household pets such as dogs and cats can hear frequencies of over 20 kHz and are more sensitive to sounds.

Figure 1 gives a summary of the auditory capabilities of man and beast. The frequency range of the voice is generally around 20 % to 30 % narrower than the auditory range. In the case of bats and marine mammals the sounds produced are used not only for communication, but also for navigation and for locating objects and prey: see the text box 'Ultrasound radar'.

Bat spotting

In the past bats were surrounded by superstition and fear; these days, however, they are seen as an indicator of a thriving environment. Unfortunately thriving environments, and hence bats, are less common than they once were.

The author, who lives in the heart of a bustling conurbation, had been searching for bats in his area for several years without success. And there the situation was left, at least until last year when his neighbours reported a sighting of a bat. A little searching around with an acoustic sensor confirmed that indeed Batman and Batwoman had taken up residence: their ultrasonic calls could be heard loud and clear with the help of a suitable receiving device.

Since then, monitoring the animals has become something of a hobby for the author. Unfortunately the scope for listening in to the signals is restricted by buildings and by time constraints. To help overcome these, a wireless ultrasonic microphone (using a radio link) was developed, and the processing of the resulting data was automated using a PC running software originally developed for radio reception. A suitable PC program is the DREAM DRM software that will be familiar to many *Elektor Electronics* readers.

ound Receiver

SDR meets Batman

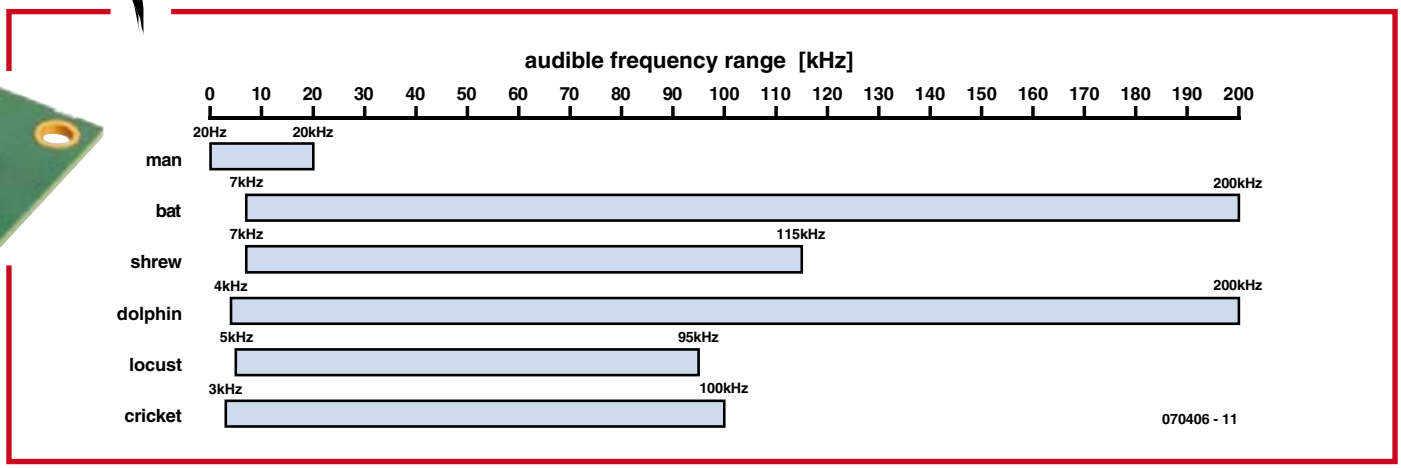

Figure 1. Human hearing covers frequencies of up to 20 kHz, a relatively narrow range compared to that of many creatures.

Bat radio

Is it possible to use a radio to listen to a bat? In principle the answer is yes, as long as we ensure that we cover the right frequency range. The Software Defined Radio (SDR) described in the May 2007 issue of *Elektor Electronics* will in theory operate down to very low frequencies, even just a few kilohertz. So, if we can use the radio in SSB mode tuned to a frequency of 40 kHz to 50 kHz and replace the antenna with an ultrasonic microphone and matching preamplifier, the presence of any nearby bats will instantly be revealed.

The original Software Defined Radio tuning facility is not able to work at the very low frequencies we require here; however, with a new extended version of the program we can adjust the oscillator frequency down to 20 kHz. The new software (**Figure 2**) covers the full range from 20 kHz to 30 MHz in steps of 1 kHz: see also the article 'SDR and VLF' elsewhere in this issue.

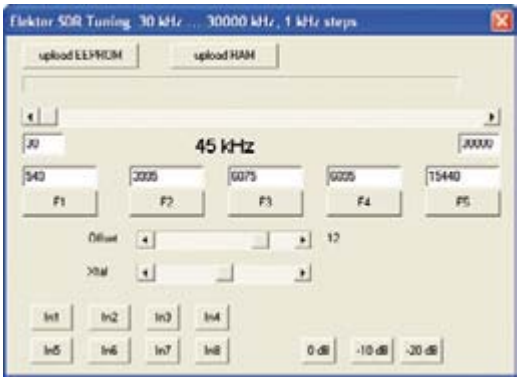

Figure 2. New tuning software for the SDR board allows reception at 45 kHz.

Microphone plus preamplifier

The ultrasonic microphone normally used in commercially-available bat detectors is a ceramic ultrasound transducer covering frequencies around 40 kHz, of the type chiefly used in ultrasonic distance measuring devices. The UST-40R that we use here (available, for example, from Reichelt Electronics; www.reichelt.de) is a typical device of this type. We also require a low-noise preamplifier. One grounded-emitter amplifier stage using a dead com-

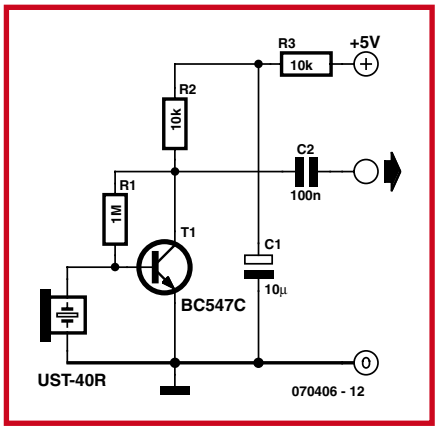

Figure 3. Microphone preamplifier for a ceramic ultrasonic transducer.

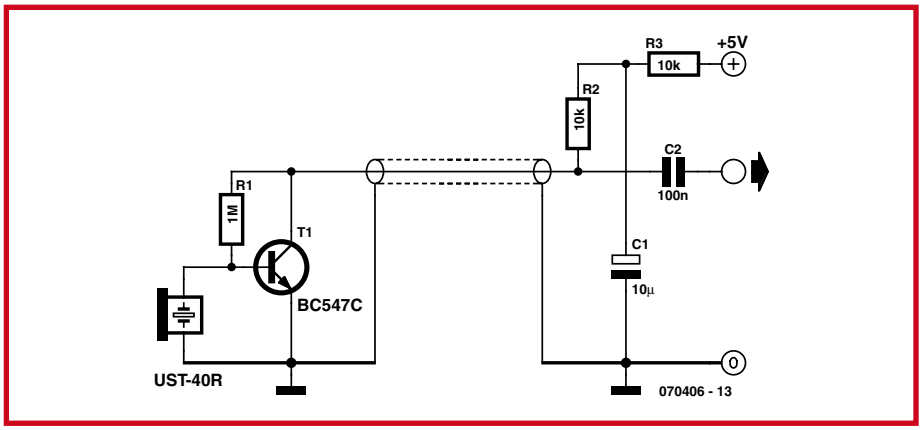

Figure 4. The microphone preamplifier can be used in conjunction with a long cable.

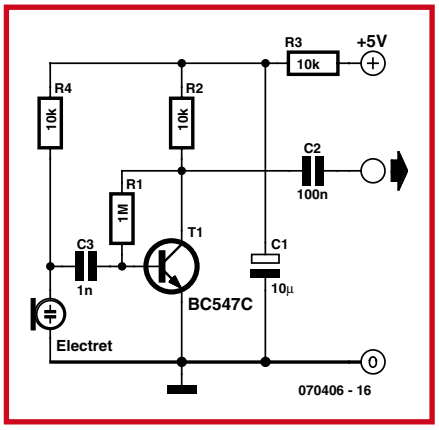

Figure 5. Preamplifier for an electret microphone capsule suitable for operation in the ultrasound range.

mon BC547C or BC549C (**Figure 3**) is sufficient in this case, giving a gain of around 40 dB. The output of the preamplifier is connected to the spare antenna input number 4 of the SDR board.

This will allow us to use software to switch between normal radio mode and bat monitoring mode.

The ultrasonic microphone we use has a relatively narrow response peak around 40 kHz, with a secondary peak around 80 kHz. It is relatively insensitive to all other frequencies between about 20 kHz and 100 kHz.

If it is desired to use a longer microphone cable the circuit can be separated as shown in **Figure 4** so that a two-core screened cable can be used to carry both power for the preamplifier and the returned signal.

Other microphones

There are many alternatives to the relatively narrow-bandwidth ceramic 40 kHz ultrasound sensors. A few experiments have shown that an ordinary piezo sounder can be used as an ultrasound transducer. The flat discs generally have several resonance frequencies. A device with a diameter of 27 mm was found to have a natural resonance at around 30 kHz and another at 50 kHz. At these points the transducer has comparable sensitivity to the ceramic 40 kHz ultrasound transducer.

It is also worth experimenting with electret microphone capsules. Even if the response of the microphone is only given as extending to 20 kHz, the usable frequency range is often much wider. And there are also professional microphones designed for use in instrumentation with a wide frequency response, but these are far from economical.

When using an electret microphone it is worth noting that the response falls off at higher frequencies. So that the preamplifier is not driven into clipping by the lower-frequency signals, a small 1 nF (0.01 µF) coupling capacitor

Ultrasound radar

In order to help orientate themselves, bats emit brief bursts of ultrasound, sometimes using constant frequency (CF) and sometimes with rapid frequency modulation (FM). The Greater Horseshoe bat species, for example, produces a tone at 83 kHz lasting for just 30 ms to 40 ms, which is initially at constant frequency but which towards the end has frequency modulation imposed upon it. Another species, Daubenton's bat, uses a purely frequency-modulated tone sweeping from 60 kHz down to 30 kHz over a period of 10 ms. By combining CF and FM tones the bat can determine the distance to the insect prey (using FM) and the relative speed (using CF). The reflected CF signal also provides information about the wing beat frequency of the insect, which helps the bat determine its species and size.

Two physical effects play an important role in processing the reflected sound signal: the Doppler frequency-shift effect and interference.

Doppler shift can be heard when any sound source moves of flies by (for example, a train, car or aeroplane). While the object is approaching, its sound is heard at a higher pitch, and while an object is receding, the sound is heard at a lower pitch. The difference in frequency depends on the relative speed of the object and the observer. Interference can make this detectable as a beat frequency. When two tones are mixed together interference creates the perception of a new signal at the difference frequency. The bat processes this difference frequency which is created in its auditory system by interference between the transmitted signal and the received echo signal.

Primarily thanks to their specialised sonar system some species of bat are among the most effective hunters of insects in existence. A single Daubenton's bat can easily catch 60,000 gnats, midges and mosquitoes in one season, enough to survive its hibernation.

Note that bats should never be disturbed when they are hibernating or nesting. If disturbed while hibernating, a bat will invariably wake up, resulting in a life-threatening level of energy use. Bat watching should therefore be limited to open spaces.

For communicating among themselves bats, like most other animals, use calls in the audible part of the spectrum, ranging from metallic clicks to a bee-like buzz.

should be used. With the circuit shown in **Figure 5** a small (5 mm diameter) electret microphone will be usable at frequencies of well beyond 50 kHz.

Radio microphone

Even the longest practically-usable cable is too short for some applications, and we need to look at other ways to increase the distance between microphone and PC. If the SDR is already connected to a roof-mounted antenna or to a long-wire antenna in the garden, a tempting option is to connect the ultrasonic microphone preamplifier output to a radio transmitter and let the signal be received by the SDR in the normal way.

Figure 6 shows the very simple circuit diagram of a small transmitter using DSB (double-sideband modulation) at 13.56 MHz. The transmitter can be clamped directly onto the end of the SDR antenna, avoiding any concern that a significant amount of power might be radiated. If a significant range is wanted, there is no problem: the frequency of 13.56 MHz is reserved for industrial and scientific applications (including eavesdropping on bats!).

The TA7358 integrated mixer used is primarily aimed at applications in FM input stages, and internally is very similar to the ubiquitous NE612 balanced mixer, which can also be used in this circuit. The TA7358 also includes an RF preamplifier, which we do not use in our design. The miniature transmitter (**Figure 7**) thus uses only a very small number of components. The balanced mixer produces an AM output signal with a suppressed carrier, also known as a DSB signal. At the receiver we can choose to listen to either the upper sideband (USB) or the lower sideband (LSB). Depending on the ultrasonic frequency being monitored the receiver should be tuned to approximately 30 kHz to 50 kHz above or below the centre frequency. Although the carrier is to a large extent suppressed it is still of sufficient amplitude to allow it to be located to simplify testing the operation of the transmitter and to help adjust the transmitter antenna circuit for resonance.

Results

The tiny transmitter can be used to listen to bats in conjunction with practically any shortwave receiver capable of SSB reception, including, of course, the widely-used DRM receiver described in the March 2004 issue of *Elektor Electronics*. Using the SDR we have made recordings of a bat, available for download as MP3 files from the *Elektor Electronics* website. The call of this animal is at around 40 kHz to 50 kHz. The MP3 files include the received signal at its original speed as well as at one half and one quarter of the original speed, so that the structure of the call can be more clearly heard.

More detailed investigations as to the nature of the signal can be carried out using the microphone and shortwave transmitter. The wide reception bandwidth of the SDR is a big advantage here. Most of the frequency components of the call of the animal in question lie between 41 kHz and 48 kHz (**Figure 8**). It is probably therefore a pipistrelle, as commonly found in buildings during their breeding season from April to July.

(070406-I)

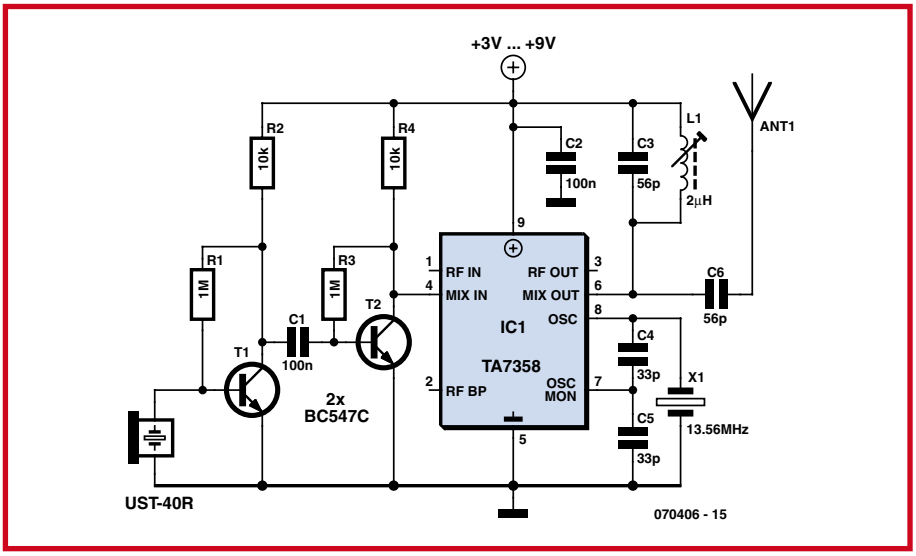

Figure 6. Circuit diagram of a wireless ultrasound microphone with DSB transmitter.

Web Links

http://www.bats.org.uk
(the UK Bat Conservation Trust)

http://en.wikipedia.org/wiki/Bat

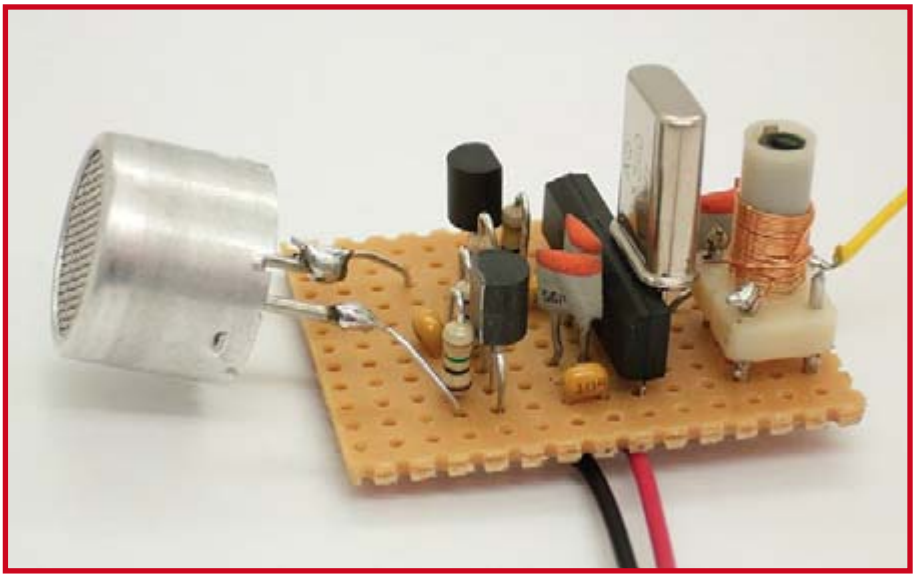

Figure 7. Prototype of the miniature bat eavesdropper circuit shown in Figure 5.

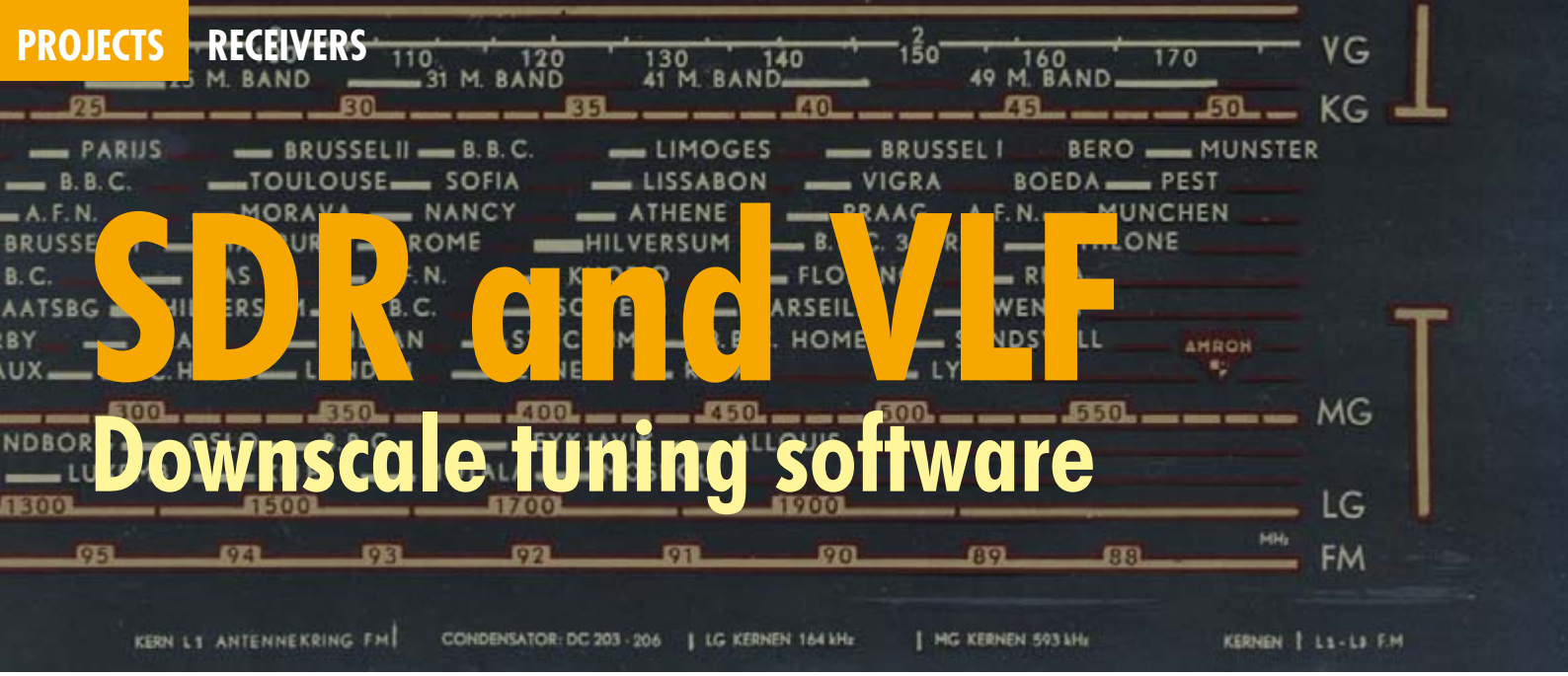

SDR and VLF

Downscale tuning software

Burkhard Kainka

Almost as soon as the Software Defined Radio article was published in the May 2007 issue of *Elektor Electronics*, we started receiving requests for special-purpose receiver upgrades. The most commonly requested capability was extending the receiver range to include low frequencies.

The VFO can be tuned as low as 20 kHz, and the receiver input stage is suitable for very low frequencies, so there are no theoretical obstacles to using the SDR board for the VLF band. And even though the CY27EE16 programmable oscillator represents a compromise in terms of cost, current consumption and flexibility that cannot satisfy every wish, it's still possible to achieve a bit more by using specially modified software.

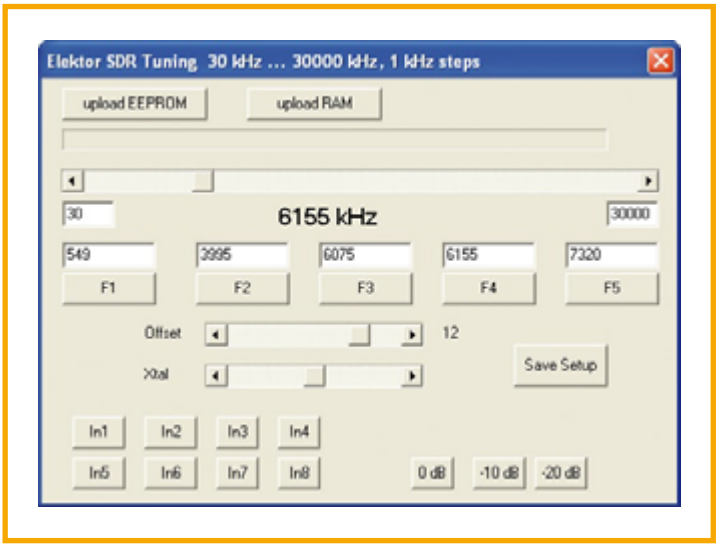

Figure 1. The new SDR tuning program.

The original software was organised in several bands with different channel spacings. This naturally led to a desire for a uniform tuning step size of 1 kHz in all the bands. In addition, readers wanted to have the tuning range extended downward as far as possible. Both of these requests are satisfied by the new software. Now it's possible to tune continuously from 30 kHz to 30 MHz, for example. The upper and lower limits of the tuning range can be adjusted to meet specific needs. Band tuning, such as over a range of 3500 kHz to 3800 kHz, is also easily possible. However, it's not all roses: although the 1-kHz tuning step size is maintained above 2 MHz, the spacing is not exact but only approximate. There is also more incidental noise during rapid tuning than with the old software, which matches the 'natural' step size of the CY27EE16.

Tuning

A glance at the data sheet of the CY27EE16 programmable crystal oscillator reveals a few potential tricks. **Figure 2** shows part of the block diagram with the PLL and the dividers. The VCO is designed for a range of 100 MHz to 400 MHz. However, this does not mean that these are hard limits, but only that the component achieves the best noise figure in this range. Experiments have shown that it is easily possible to use a range extending from 30 MHz to 360 MHz. Unfortunately, output divider DIV1*N* has a resolution of 7 bits, which gives it a maximum division ratio of 127. If you divide 30 MHz by 125, you have 240 kHz at the output. The 74HC74 digital divider on the board adds an extra factor of 4 to this. This means that the lower limit of the adjustment range of the PLL is 60 kHz.

In the original tuning software, the PLL was always tuned using a reference frequency of 200 kHz, which means that the *Q* counter was set to 50. Adjusting the frequency slider in small steps only affected the P counter. This resulted in a constant tuning step size and soft tuning of the PLL without large steps. As a result, it was possible to scan through an entire band by clicking on the edge of the slider and holding the mouse button down. The output frequency was set to the desired range by output divider Div1*N*, which yielded a certain channel spacing. The new software sets *Q* according to the band that is currently being used. As a result, it is possible to maintain a smooth 1-kHz tuning step size between 60 kHz and 2 MHz without any tuning noise.

Lower…

But we can go even lower. This is because the divider input can be connected directly to the 10-MHz crystal signal, bypassing the PLL. To achieve this, it is necessary to set only the highest-order bit of Div1*N*. However, the tuning function works quite differently in this case: it is inversely proportional to the division factor of Div1*N*. The resulting frequencies are not integral kilohertz values, but instead decimal fractions, which in most cases only approximate the desired frequency. The lower the output frequency, the larger the division ratio and the smaller the rounding error. **Listing 1** shows the tuning method for the low-frequency bands up to 2 MHz.

…in small steps

It is not possible to achieve a channel spacing of 1 kHz above 2 MHz using conventional PLL methods. The formula

$f = 10\ \text{MHz} \div (Q \times P) \div \text{Div1}N$

simply does not yield an arbitrarily small channel spacing with a constant *Q*. This means that *Q* must also be adjusted. If an 'even' ratio such as 33/10 does not achieve the desired objective, you can also try ratios such as 35/11 or 41/13 to see if they give a better result. This all amounts to using a loop to test all possible combinations of division factors for *P* and *Q* for each frequency. The combination that gives the closest result wins (**Listing 2**). The PC can calculate all the combinations (around 150,000) faster than you can click. The tuning process is thus practically real-time.

Although the result does not give an exactly regular channel spacing, it does yield smaller tuning steps overall. This makes it possible to traverse the entire range up to 30 MHz in 1-kHz steps. However, a considerable amount of noise is generated during tuning because the PLL has to work harder to adjust to each new division ratio.

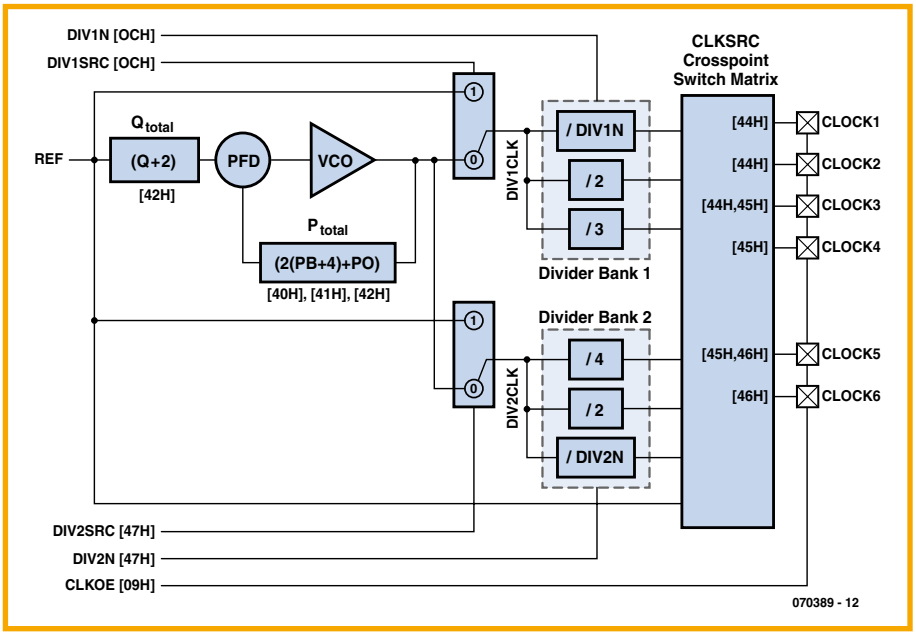

Figure 2. The PLL and divider in the CY27EE16.

Antennas and filters

Entering the world of DCF77 and its cohorts requires a suitable antenna and a suitable input filter. In the simplest case, the combination of a wire antenna and a relatively large capacitor (e.g., 2.2 nF) across the antenna input, which acts as a low-pass filter, is sufficient. Better results can be achieved by using a low-pass filter with a supplementary RF choke (**Figure 3**).

A loop antenna (**Figure 4**) can also provide serviceable results. As an experiment, 100 turns of 0.2-mm copper wire

Listing 1

Tuning between 20 kHz and 2000 kHz

```
procedure FreqRechnen(Freq: Integer);
var Qout,Pout : Integer;
    Min, VCO: Real;
begin
    if (Freq > 19) and (Freq < 60) then begin
      Div1N := round (2500 / Freq) + 128;
      p := 1000;
      q := 40;
  end;
  if (Freq > 59) and (Freq < 801) then begin
      Div1N := 125;
      p := Freq * 2;
      q := 40;
  end;
  if (Freq > 800) and (Freq < 2001) then begin
      Div1N := 50;
      p := Freq ;
      Q := 50;
  end;
```

Listing 2

The empirical procedure for higher frequencies

```
  if (Freq > 20000) and (Freq
  < 30001) then begin
    Div1N := 4;
    Min := 10000;
    for Q := 100 downto 10 do begin
      for p := 500 to 2000 do begin
        VCO := 10000/Q*P;
        if abs(4*Freq-VCO/Di-
  v1N) < Min then begin
          Min := abs(4*Freq-VCO/Div1N);
          Qout := Q;
          Pout := P;
        end;
      end;
    end;
    Q := Qout;
    P := POut;
  end;
```

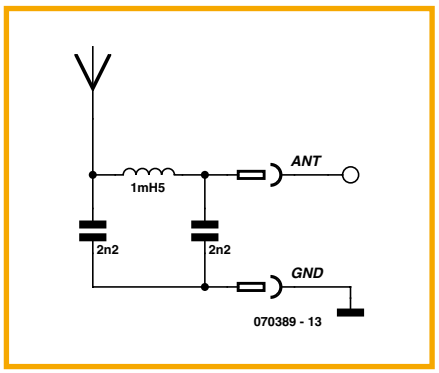

Figure 3. A low-pass filter for signals below 150 kHz.

were wound around the periphery of a cardboard box with dimensions of 18.5 cm by 25.4 cm (we used the box in which the bare receiver PCB was delivered). The large inductance of the antenna coil yields a natural low-pass effect, which is complemented by its considerable winding capacitance. The relatively flat resonant frequency is approximately 150 kHz.

Testing

A suggested test signal for initial experiments with the receiver is DCF39 at 139 kHz, which is a telecontrol transmitter located near Magdeburg, Germany. You will see a carrier that is occasionally modulated using a two-tone modulation scheme. DCF49 at 129.1 kHz, which is located at Mainflingen, is a similar transmitter. The well-known DCF77 time signal transmitter, which operates at 77.5 kHz, is located in the same place. You can clearly hear the short and long seconds pulses, which are now used to transmit weather information in addition to the time of day. And of course there are also many other signals, including signals that are actually the third or fifth harmonics of other signals that are insufficiently attenuated. If you tune using 1-kHz steps and you find a signal that wanders through the spectrum in large steps, you have discovered such a signal. In the course of time, you can figure out what is actually happening on that frequency. You have to be careful not to be fooled by the signal corresponding to the horizontal scan rate of your monitor or other interference signals from your surroundings. In many cases, you can recognize distant signals by their slow fading.

(070389-1)

Web Links

http://en.wikipedia.org/wiki/Longwave

www.giangrandi.ch/electronics/dcf77/station.html

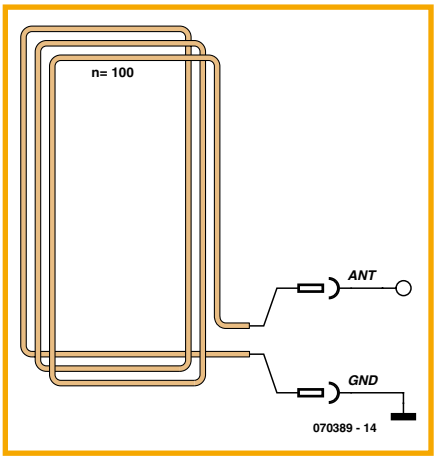

Figure 4. A simple 100-turn loop antenna (approx. 18 by 25 cm).

Publicité

elektor leading the way electronics

Participate in the Elektor Readership Enquiry and win £ 35 (€ 50) !

Making a good and inspiring magazine for our readers is time and again our motive behind every new issue. We receive many positive reactions but we are convinced that there is always room for improvement. And that's what we would like you to tell us. Participate in our online readership enquiry on www.elektor.com!

Our end of the bargain

Of course we appreciate your cooperation. We will therefore raffle 5 Elektor Vouchers worth £ 35 (€ 50) among all participants!

Results

The results of the enquiry as well as the names of the winners can be found on our internet site www.elektor.com after the enquiry is closed. We expect this will be around October.

www.elektor.com

browse online now!

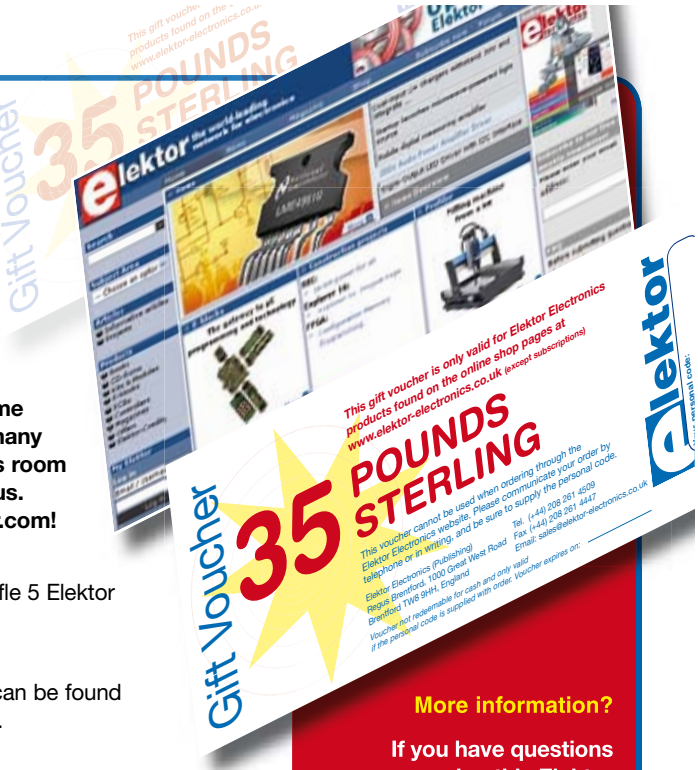

More information?

If you have questions concerning this Elektor Readership Enquiry please go to Service → Feedback on our website and select "Other" for the subject.

No1 Number One Systems

Easy-PC for Windows

The World Beating PCB design software

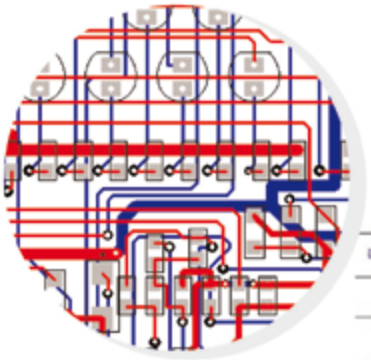

The new Easy-PC reaches even higher!

The breathtaking new Easy-PC for Windows Version 11 is released. Winning accolades the world over, V11 of the market leading Easy-PC delivers even more remarkable value for money and sets the new benchmark for performance in PCB CAD.

STILL FROM ONLY £247 PLUS VAT

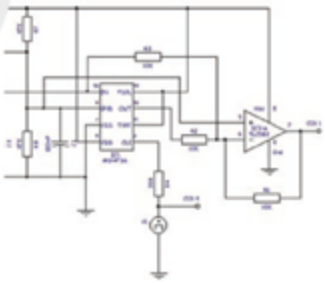

Just try a demonstration copy of Easy-PC and prepare to be amazed…

Easy-PC delivers a simple to understand, fully integrated Schematics & PCB layout in a single application. Design and rules checks at all stages ensure integrity at all times. Professional manufacturing outputs allow you to finish the design process with ease.

Stop press... Stop press... Stop press...
Easy-PC is supported running under Windows Vista

Version 11 features

- Design revision analysis
- Star/Delta points
- Apply layout pattern & groups
- Design calculators
- Electrical rules check (ERC)
- Shape editing panel
- Merge/subtract shape editing
- Track analysis

Plus many more exciting features...

Call for a brochure, prices & CD on +44 (0)1684 773662
or e-mail sales@numberone.com
you can also download a demo from
www.NumberOne.com

Oak Lane, Bredon, Tewkesbury, Glos. GL20 7LR. United Kingdom

PCB-POOL®

SERVICING YOUR COMPLETE PROTOTYPE NEEDS

1 EUROCARD
(160 x 100 mm)
+ Tooling
+ Photoplots
+ VAT
€49

Price example
Any size and contour possible!

Optional:
- Soldermask
- Fast-turnaround
- Silkscreen
- 4-Layer Multilayer
- 6-Layer Multilayer

DOWNLOAD OUR FREE LAYOUT SOFTWARE!

Over 18,000 Customers

Freephone 0800-3898560
Tel.: +353 (0)61 701170
Fax: +353 (0)61 701165
pcb-pool@beta-layout.com

Simply send your files and order ONLINE: PCB-POOL.COM

EzPCB

Professional PCB Supplier

High Quality
Competitive Price

URL: www.EzPCB.com
Email: sales@ezpcb.com Tel: +86 139 1002 1704
HDI Up To 50 Layers, 2.5mil T/C, 0.1mm Hole Size
Other Products: Stencils, Keypads, Frontpanels,
Flex PCB, Enclosures, Turnkey Services

Racing

Make w

Maaike Roefs, Solar Team,
Technical University Twente

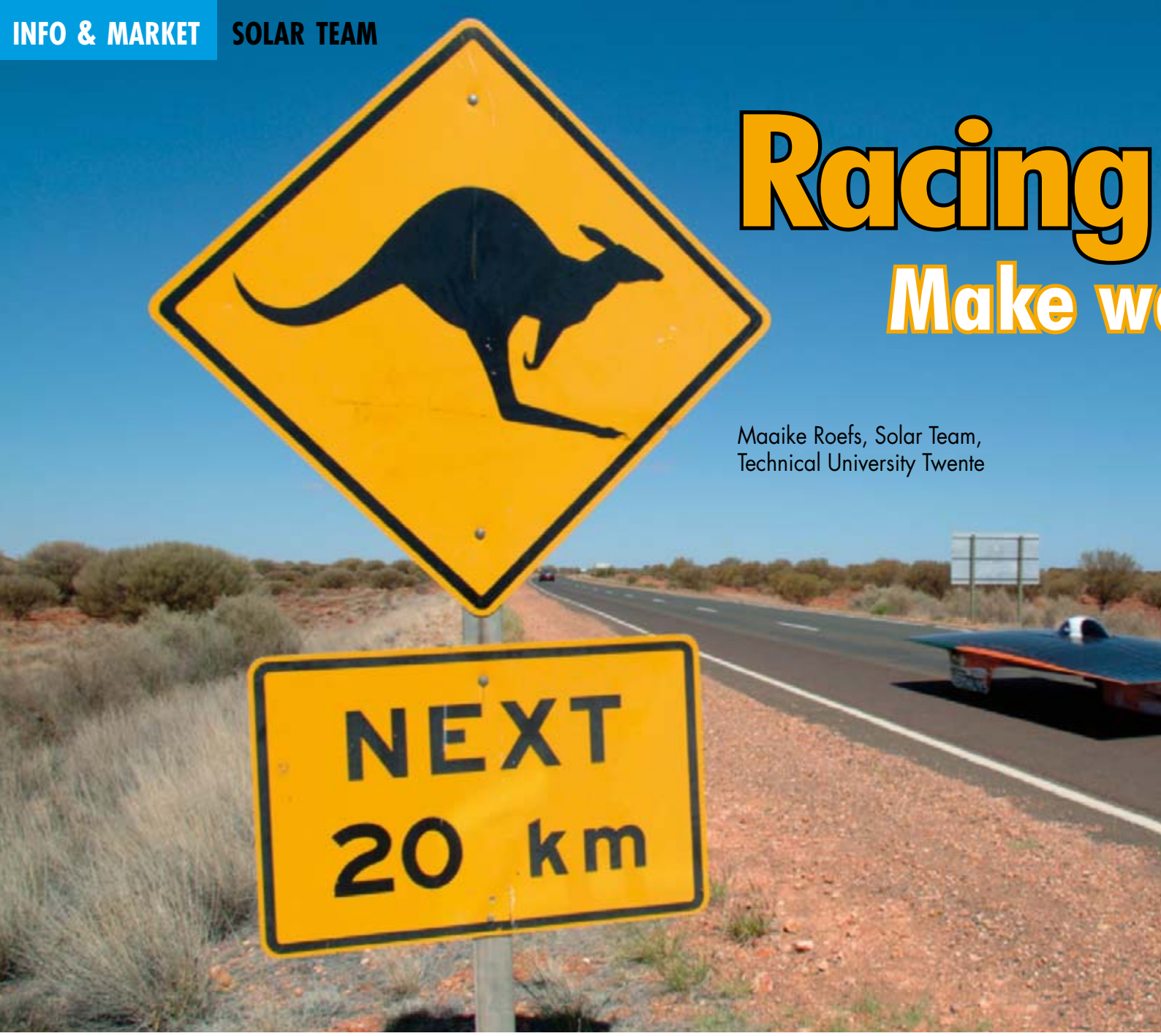

Once you've seen it, the image will always stay imprinted on your retina. When you see it zoom past, you can't help yourself from watching it carry on into the distance. When you stand next to it, it sends shivers down your spine and you want to take it for a ride. And once you've driven one, you want to do it again and again. You're now convinced that it's your future, *the* future! You don't feel that excited about just any car. This one is just so special: it's really eye-catching and you can see the ambition and innovation that's gone into this solar-powered car.

The design of a solar-powered car for taking part in the prestigious World Solar Challenge isn't just another assignment, quite the opposite. It is an enormous project on which 16 students from the Saxion Polytechnic and the University of Twente, The Netherlands, have been working for a good one and a half years. In a series of three articles we'll give you an insight to the project and the activities of the Solar Team Twente. In this first instalment we'll tell you about the race, the team and the origins of the project.

Best newcomer comes back for more

The World Solar Challenge is a race for solar-powered cars right across Australia. It is a prestigious race that now takes place every two years, where developments in the use of renewable energy take centre stage. Over 40 teams from about 20 countries take part. The race goes from Darwin in the North to Adelaide in the South, a distance of almost 1,900 miles, which take the solar-pow-

under the Sun

ay for the Solar Team Twente

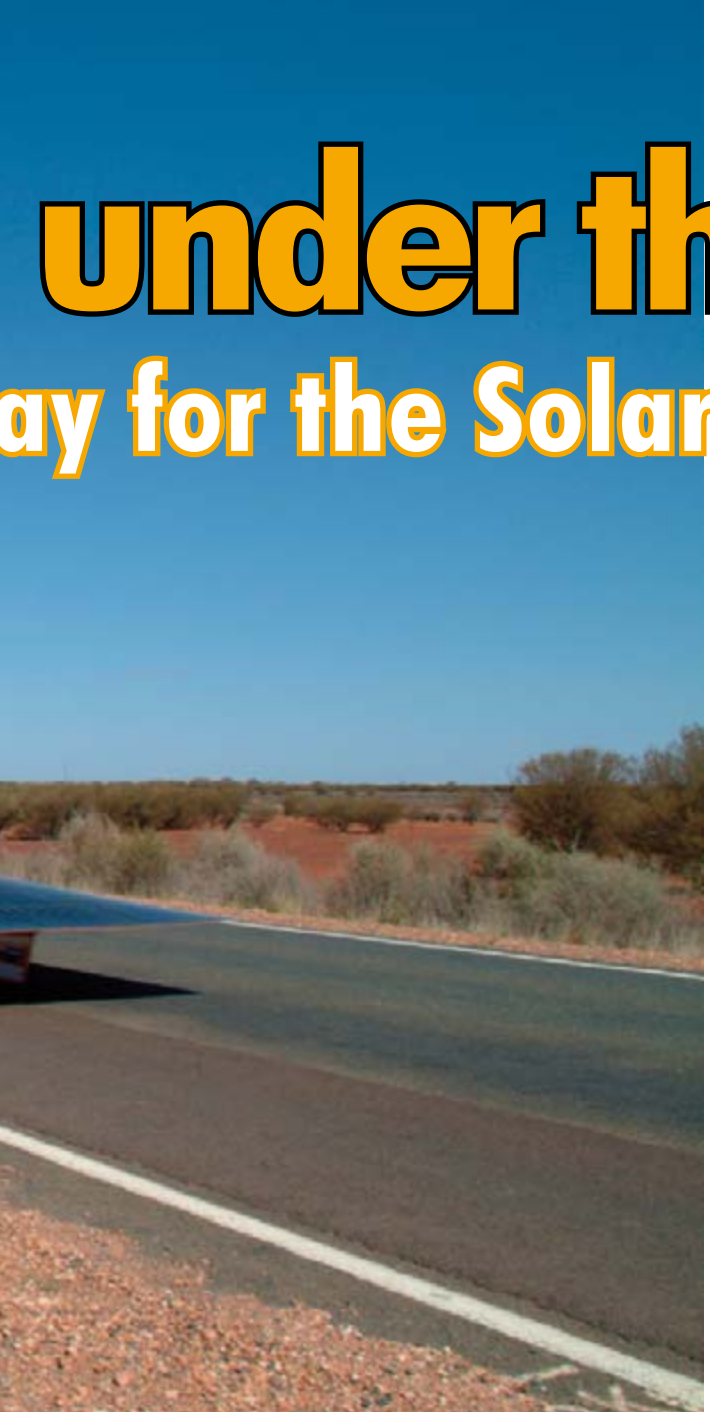

The solar-powered car of Solar Team Twente in 2005 in Australia. This finished ninth and was the best newcomer.

ered cars about five days.
The 21st October 2007 sees the start of the next race. This year is the second time that the Solar Team Twente takes part. In 2005 the team from Twente finished an impressive ninth and was crowned the best newcomer. Joost Kuckartz, a student in Electronics Engineering at the University of Twente, set up the first team in 2003. "Even before The Netherlands took part in the World Solar Challenge I was already infatuated by solar-powered cars. I wanted to find out everything about them and I followed all the races. When I started studying I had the opportunity to create a team myself. It's great that this project continues to the present day."

A new team was formed in June 2006. Team members from the Solar Team 2005 held a number of lectures and visits in order to whet the interest of potential new team members. Those interested could sign up before the usual application rounds. Sixteen students from the University of Twente and the (co-sited) Saxion Polytechnic were selected by the previous team members to make up a new team. In order to get started as quickly as possible, a kick-off weekend was organised. This was primarily meant for all team members to get to know each other and was part of a team building exercise. There were also many discussions during this weekend. Agreements were made regarding the work to be done, the division of tasks were worked out and, most importantly, the objective was agreed. This was simply: 'We're seeking a podium finish, but aim to be first!' Large quantities of clay were used to make a few conceptual designs. The eventual design had a lot in common with one of the designs suggested during this weekend.

Diverse team

Since that weekend in September 2006 the team members have had their hands full with the project. All of them have put their studies on hold for one and a half years for the project. As a small financial compensation, during this period they'll still receive a percentage of their grant. Not only the standard working days, but also many evenings and weekends are taken up by work for the Solar Team. But it's worth it! To be part of a team of 16 and to see the culmination of all your hard work take shape is an incredible experience. For some of the team members this project is part of their studies, but for the others it's completely voluntary.
The project consists of much more than just the technical aspects. The subjects studied by the students vary from Engineering to Psychology, and from Electronics to Medical Sciences. Five of the sixteen team members are involved with a non-technical side of the project, such as sponsorship, logistics and media. Although this is a pure student project, advice and help from several companies, local authorities, educational and some specialist institutions are vital.

Adopting solar cells

One of the challenges for the 2005 team was the financing of the project, and they had to rely a lot on sponsorship. It's the same for the new team and finances play an important part in bringing the project to a successful conclusion. To have a serious chance of a top-3 finish you have to use the best solar cells. The cost of these solar cells alone takes up nearly half the budget for the whole project. Other big expenses are of course the construction of the car, PR, and travel to Australia. The Solar Team Twente is therefore dependent on their sponsorship money. Sponsorship is looked for both in cash as well as in kind. In kind, sponsors are mainly technical firms who

The team members of Solar Team Twente with their SolUTra.

agree to give, design or produce certain parts for the car. At this moment in time the Solar Team has the support of a large number of sponsors: over 100 sponsors are now involved with this project!
The Solar Team has run several campaigns to attract sponsors. One of the campaigns was called the 'Club of Thousand'. The team members picked up the phone and called about 1,200 firms during a two-week period, mainly from the region of Twente. These firms were asked if they wanted to join the Club of Thousand, where each firm gave 1,000 euros (approx. £ 700) in sponsorship. This initiative managed to finance a large part of the project.
Apart from the Club of Thousand campaign, one was also set up with individuals in mind. For a relatively modest sum of 25 euros (£ 17) you can 'adopt' one of the 2,000 solar cells. In this way members of the public can show their support and involvement and the Solar Team Twente gets a helping hand. Almost 700 cells have been adopted to date. This campaign is still active and you too can adopt a cell via www.solarteam.nl.

Space Shuttles on wheels

Although sponsorship is an important part of the project, we shouldn't forget that the main aim is to build a winning solar-powered car. The design and development of a solar-powered car is an enormous task.
It's more of a challenge this year due to some changes in the regulations.
Up to now the cars taking part were more like space shuttles on wheels and you couldn't ever imagine using one to do the weekly shopping or go on holiday with. However, this will change. In the framework of the twenty-year existence of the World Solar Challenge there is a new regulation this year. This distinguishes between two classes: the *Adventure* and the *Challenge* class. Most of the prominent teams, and hence Solar Team Twente, take part in the *Challenge* class. Several regulations have been adapted for this class, which make the cars look a bit more like road cars. For example, the driver now has to sit upright in the car, which completely changes the look of the car. Furthermore, the area that may be covered with solar cells has been restricted. In the past an unlimited number of cells could be used and winning became more a question of the money available. This year the area of solar cells has been limited to only 6 m^2 (18 sq. ft.). As a result of this, limitation ingenious ways have to be invented to capture as much sunlight as possible. The solar-powered car also has to be equipped with headlights, a horn and a steering wheel.
These changes made the teams think 'outside of the box' and called upon the creative and innovative skills of the team members. At the start were many brainstorming sessions where many concept designs were proposed. The number of designs was continually reduced through critical analysis by the technical team members. The path to the eventual concept design takes a tortuous route. Good use has to be made of external sources of knowledge and experience. A large list of design criteria had to be sounded out and agreed on. These included the speed, ease of construction, weight distribution, stability, reliability, cost and planning. In the end a daring concept was chosen and the actual design began.
Two innovative ideas have been included in the design. The first relies on principles found in nature. Just like a sunflower, the solar cells follow the position of the sun. This keeps them pointed straight at the sun for as long as possible during the day. An ingenious system with lenses has also been used, for which a patent has been applied. In the next edition of *Elektor Electronics* we will take an extensive look at the design of the car.

(070380-I)

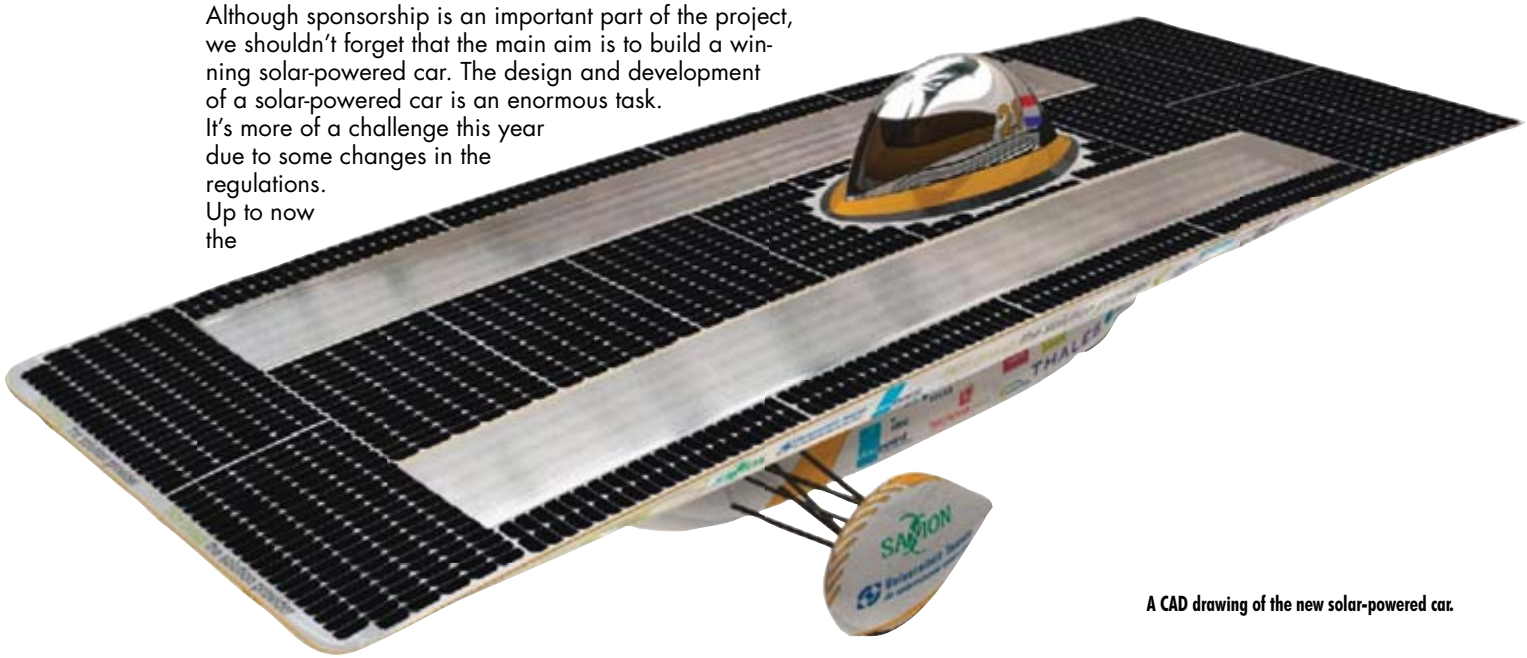

A CAD drawing of the new solar-powered car.

eweekly
elektor electronics

Take out a free subscription to E-weekly now

Do you want to stay up to date with electronics and computer technology? Always looking for useful hints, tips and interesting offers? Subscribe now to E-weekly, the free Elektor Electronics Newsletter.

Your benefits:

- The latest news on electronics in your own mailbox each friday
- Free access to the News Archive on the Elektor website
- You're authorized to post replies and new topics in our forum

Register today on www.elektor-electronics.co.uk/newsletter

ELECTRONICS courses at Derby

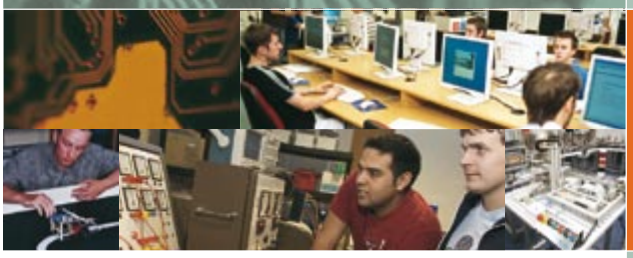

ELECTRONICS

Do you love building kit and making things work?

Do you want a career where you get paid for doing something you enjoy?

If so, we've got the course for you. Study full time or part time and specialise in areas that interest you. Our staff have lots of industry experience and are passionate about their work.

Our courses include:

- BSc (Hons) Electronics
- BSc (Hons) Electrical and Electronic Engineering
- HNC / HND Electrical and Electronic Engineering

Find out more
t: 01332 593216
e: adtenquiry@derby.ac.uk

UNIVERSITY of DERBY

www.derby.ac.uk/adt

No Compromise Oscilloscope

Other oscilloscopes in this price range force you to compromise on one of the key specifications:

sampling rate, memory depth or bandwidth.

The PicoScope **5000** series is a no compromise PC oscilloscope at a price every engineer can afford.

www.picotech.com/scope428

01480 396395

pico Technology

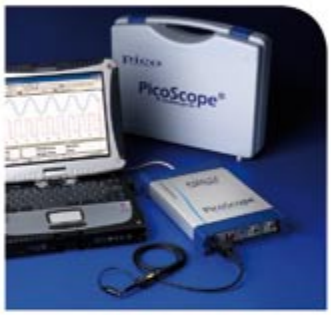

1GS/s sampling rate

250MHz bandwidth

128M sample buffer memory

125MS/s 12 bit AWG built in

PicoScope 5203
32M buffer **£1195**

PicoScope 5204
128M buffer **£1795**

FM Superregenerative Receiver

using only two transistors

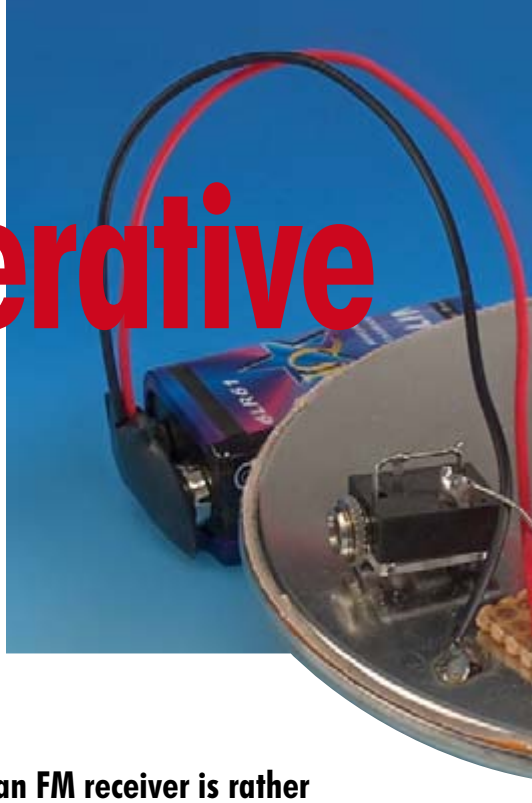

Burkhard Kainka

Building an AM receiver is a simple project for a beginner, but building an FM receiver is rather trickier. However, with a little ingenuity we can get away with a very small number of components: our superregenerative 'audion' receiver uses just two transistors, two coils and a few capacitors. A 'mini' project in the true sense of the word!

Component count is not the only respect in which our superregenerative audion receiver design is economical. As most readers will know, good grounded screening is essential in a radio receiver. In our prototype we recycled the tin lid from a packet of coffee for this purpose: the ideal type of packet is one with sides made from cardboard to which the lid is crimped, as the edge can simply be cut with a sharp knife. It is easy to bend to the desired shape, provides a stable base for mounting and takes solder easily. For the circuit connections either plain perforated board or stripboard is suitable (see large picture).

We also wind the coils ourselves. The oscillator coil is made from five turns of 0.8 mm (ideally, silver plated) copper wire on a diameter of 8 mm. Short connections are essential, especially to the tuning capacitor: we soldered a trimmer directly to the ground plane. The second coil in the circuit consists of 20 turns of 0.2 mm enamelled copper wire wound on a 10 kΩ resistor. The rest of the circuit is constructed as shown in **Figure 1**.

The antenna should not be too long, as otherwise the circuit may cause interference: the superregenerative circuit is also a transmitter! Nevertheless the circuit is very sensitive and operates perfectly satisfactorily using a 10 cm length of wire for an antenna. The headphones should ideally have an impedance of at least 400 Ω. The circuit will work with 32 Ω stereo headphones, but the output will not be as loud.

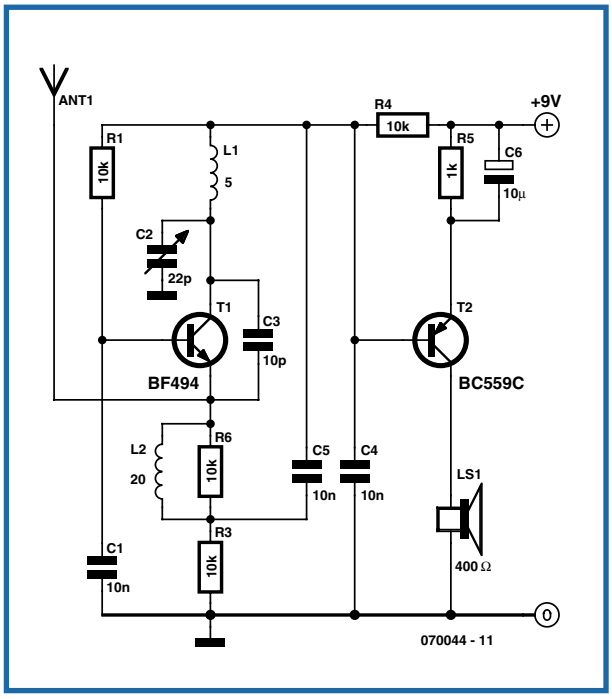

Figure 1. A handful of components go to make our FM receiver.

Reception in practice

When the receiver is switched on the output will consist of noise. The frequency can now be adjusted using a screwdriver: when an FM station is encountered the noise will reduce in volume or disappear altogether. The tuning must be adjusted so that it is just on the edge of the band occupied by the transmitted signal: this requires a little patience, luck, and skill with the screwdriver. Once you have found your favourite station, of course, there is no need to adjust the circuit again.

The sound quality from this simple receiver is admittedly somewhat mediocre, although it is remarkable that it works at all given that only two transistors are used. In the early days of radio the superregenerative audion receiver design was very widely used (although of course the circuit was built using valves). The design subsequently fell from favour as it became apparent that, since it also acted as a transmitter, it could interfere with a neighbour's radio reception: this applies also to our design. It is doubtful whether such a radio could obtain its 'CE' certification mark today, and the radio is thus more of an interesting experiment than a potential challenge

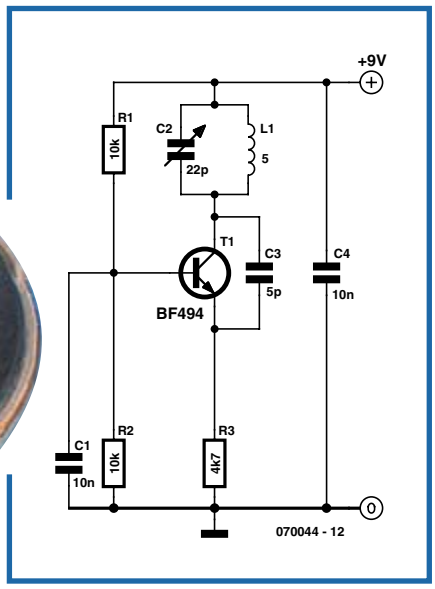

Figure 2. Circuit of an RF oscillator.

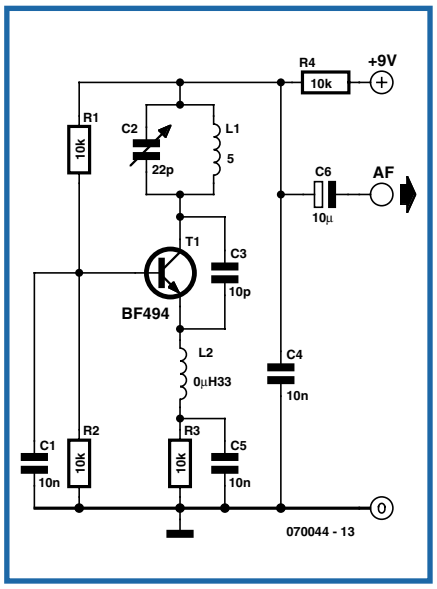

Figure 3. The capacitor in parallel with the emitter resistor makes the RF oscillator flip between 'oscillating' and 'not oscillating' states.

to the tried-and-tested superhet design. The superregenerative audion design still features in simple radio remote control receivers, remotely-controlled power sockets and remote temperature monitors.

A little theory

How does the receiver work? At first sight the circuit appears to be a simple oscillator. **Figure 2** shows for comparison a well-known RF oscillator design.

The simple oscillator keeps the amplitude of its output constant. We now modify the circuit so that the amplitude of the oscillations is much greater, and so that the transistor can be switched fully off. The value of the feedback capacitor has to be increased. It is important to use a transistor designed for radio frequency use (such as the BF494) as it is difficult to get the circuit to work using an ordinary audio frequency device such as the BC548B. The circuit shown in **Figure 3** also includes a coil in the emitter connection. Finally, the capacitor in parallel with the emitter resistor also plays an important part in the circuit: as soon as oscillations start, it starts to charge. When the potential difference between the base and the emitter of the transistor falls far enough, the transistor turns off and oscillations can no longer be sustained. The emitter capacitor

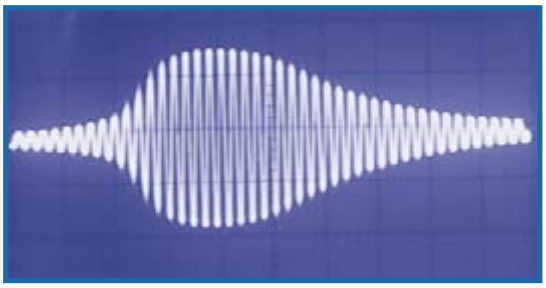

Figure 4. The RF oscillation builds up practically from zero.

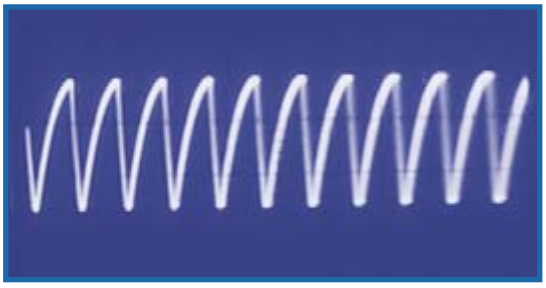

Figure 5. The quenching gives rise to a very noisy sawtooth signal at the output.

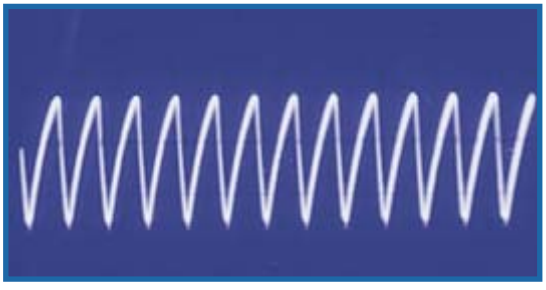

Figure 6. If a signal is received, the circuit flips between its two states more quickly and more regularly.

discharges again, a collector current once again starts to flow, and the circuit starts to oscillate again. The circuit thus flips between two states: oscillating and not oscillating. At the output we obtain a sawtooth signal with a frequency of about 50 kHz.

Each time the oscillator swings into action the amplitude of its oscillation builds up practically from zero (**Figure 4**). Thermal noise in the circuit helps to start the oscillations going, which means that the start-up time can vary considerably. This variation (**Figure 5**) leads to noise in the collector current, which in turn is heard when no station is being received.

To and fro

If, however, a signal is received at the tuned frequency, this will help the amplitude of the oscillations build up more quickly each time (**Figure 6**) and the rate at which the oscillator starts up and stops (the 'quench frequency') increases. An unmodulated RF signal gives rise to a stable quench frequency and little noise at the output. If the signal is amplitude modulated, this will affect the degree to which the it helps oscillations start up, which in turn will be reflected in the average collector current. To demodulate an FM signal we adjust the tuning so that the centre frequency

of the signal is on the edge of the range that will stimulate the oscillator: this makes the FM signal have the same effect as an AM signal.
The whole process can be seen clearly on an oscilloscope. The sawtooth signal on the emitter resistor will indicate whether a station is being received. The receiver is so sensitive that it does not actually need an antenna: the oscillator coil can pick up enough energy directly.
The circuit in Figure 3 has a further weakness in that its output consists of a high-amplitude sawtooth signal plus the desired signal at low amplitude. The cunning technique we use to avoid this is illustrated in **Figure 7**. The emitter capacitor is now wired not to ground, but to the output. As the collector current rises the collector voltage will fall and the emitter voltage will rise, and the emitter capacitor will now act to counteract this effect on the output. The amplitude of the sawtooth signal is reduced practically to zero, leaving just the desired demodulated audio output. This can be taken to an audio amplifier.
The basic circuit is now essentially as shown in Figure 1. We have added the audio amplifier stage, and the base bias circuit for the oscillator transistor is slightly simplified. Connecting one side of the tuning capacitor to ground does not affect the circuit as far as radio frequencies are concerned, and for simplicity we wind the RF coil on a resistor.

(070 044-I)

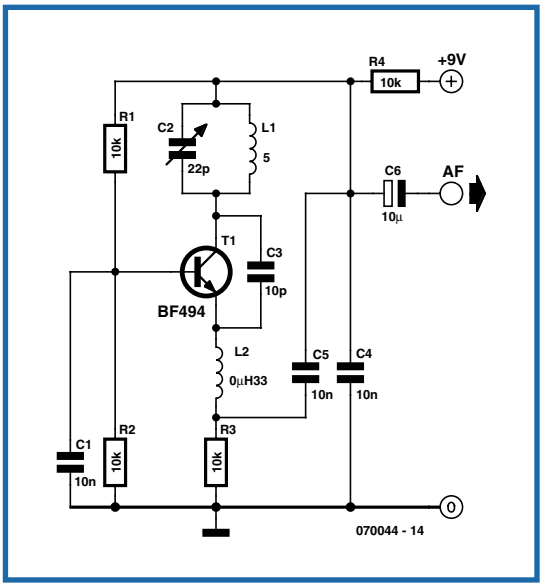

Figure 7. If we take the emitter capacitor to the output the sawtooth signal is almost completely suppressed. Just the desired signal remains.

Anzeige

NEW

Formula Flowcode Buggy

USB-programmable robot vehicle

- A complete solution: robot + software + curriculum
- Line following and maze solving
- High-tech specifications
- Also programmable with C or ASM
- E-blocks compatible
- Motivating for education and hobby

Built and ready to use for only
£ 85.00 / US$ 169.00

Ordering:
Use the order form at the back or visit our online shop.
Elektor Electronics (Publishing)
Regus Brentford | 1000 Great West Road
Brentford TW8 9HH | United Kingdom
Tel. +44 208 261 4509
sales@elektor-electronics.co.uk

leading the way elektor electronics

More information on www.elektor-electronics.co.uk

QUASAR electronics
The Electronic Specialists Since 1993

Quasar Electronics Limited
PO Box 6935, Bishops Stortford
CM23 4WP, United Kingdom
Tel: 0870 246 1826
Fax: 0870 460 1045
E-mail: sales@quasarelectronics.com
Web: www.QuasarElectronics.com

Postage & Packing Options (Up to 0.5Kg gross weight): **UK Standard 3-7 Day Delivery** - £3.95; **UK Mainland Next Day Delivery** - £8.95; **Europe (EU)** - £6.95; **Rest of World** - £9.95 (up to 0.5Kg)
!Order online for reduced price UK Postage!
We accept all major credit/debit cards. Make cheques/PO's payable to Quasar Electronics. Prices include 17.5% VAT.
Call now for our FREE CATALOGUE with details of over 300 kits, projects, modules and publications. Discounts for bulk quantities.

08717 Credit Card Sales 177 168

Motor Drivers/Controllers

Here are just a few of our controller and driver modules for AC, DC, Unipolar/Bipolar stepper motors and servo motors. See website for full details.

PC / Standalone Unipolar Stepper Motor Driver

Drives any 5, 6 or 8-lead unipolar stepper motor rated up to 6 Amps max. Provides speed and direction control. Operates in stand-alone or PC-controlled mode. Up to six 3179 driver boards can be connected to a single parallel port. Supply: 9Vdc. PCB: 80x50mm.
Kit Order Code: 3179KT - **£12.95**
Assembled Order Code: AS3179 - **£19.95**

Bi-Polar Stepper Motor Driver

Drive any bi-polar stepper motor using externally supplied 5V levels for stepping and direction control. These usually come from software running on a computer. Supply: 8-30Vdc. PCB: 75x85mm.
Kit Order Code: 3158KT - **£17.95**
Assembled Order Code: AS3158 - **£27.95**

Bi-Directional DC Motor Controller (v2)

Controls the speed of most common DC motors (rated up to 32Vdc, 10A) in both the forward and reverse direction. The range of control is from fully OFF to fully ON in both directions. The direction and speed are controlled using a single potentiometer. Screw terminal block for connections.
Kit Order Code: 3166v2KT - **£17.95**
Assembled Order Code: AS3166v2 - **£27.95**

DC Motor Speed Controller (100V/7.5A)

Control the speed of almost any common DC motor rated up to 100V/7.5A. Pulse width modulation output for maximum motor torque at all speeds. Supply: 5-15Vdc. Box supplied. Dimensions (mm): 60Wx100Lx60H.
Kit Order Code: 3067KT - **£13.95**
Assembled Order Code: AS3067 - **£21.95**

Most items are available in kit form (KT suffix) or assembled and ready for use (AS prefix).

Controllers & Loggers

Here are just a few of the controller and data acquisition and control units we have. See website for full details. Suitable PSU for all units: Order Code PSU445 £8.95

8-Ch Serial Isolated I/O Relay Module

Computer controlled 8-channel relay board. 5A mains rated relay outputs. 4 isolated digital inputs. Useful in a variety of control and sensing applications. Controlled via serial port for programming (using our new Windows interface, terminal emulator or batch files). Includes plastic case 130x100x30mm. Power Supply: 12Vdc/500mA.
Kit Order Code: 3108KT - **£54.95**
Assembled Order Code: AS3108 - **£64.95**

Computer Temperature Data Logger

4-channel temperature logger for serial port. °C or °F. Continuously logs up to 4 separate sensors located 200m+ from board. Wide range of free software applications for storing/using data. PCB just 45x45mm. Powered by PC. Includes one DS1820 sensor.
Kit Order Code: 3145KT - **£17.95**
Assembled Order Code: AS3145 - **£24.95**
Additional DS1820 Sensors - **£3.95 each**

Rolling Code 4-Channel UHF Remote

State-of-the-Art. High security. 4 channels. Momentary or latching relay output. Range up to 40m. Up to 15 Tx's can be learnt by one Rx (kit includes one Tx but more available separately). 4 indicator LED 's. Rx: PCB 77x85mm, 12Vdc/6mA (standby). *Two and Ten channel versions also available.*
Kit Order Code: 3180KT - **£44.95**
Assembled Order Code: AS3180 - **£54.95**

DTMF Telephone Relay Switcher

Call your phone number using a DTMF phone from anywhere in the world and remotely turn on/off any of the 4 relays as desired. User settable Security Password, Anti-Tamper, Rings to Answer, Auto Hang-up and Lockout. Includes plastic case. Not BT approved. 130x110x30mm. Power: 12Vdc.
Kit Order Code: 3140KT - **£54.95**
Assembled Order Code: AS3140 - **£69.95**

Infrared RC Relay Board

Individually control 12 on-board relays with included infrared remote control unit. Toggle or momentary. 15m+ range. 112x122mm. Supply: 12Vdc/0.5A
Kit Order Code: 3142KT - **£47.95**
Assembled Order Code: AS3142 - **£59.95**

PIC & ATMEL Programmers

We have a wide range of low cost PIC and ATMEL Programmers. Complete range and documentation available from our web site.

Programmer Accessories:
40-pin Wide ZIF socket (ZIF40W) £14.95
18Vdc Power supply (PSU010) £18.95
Leads: Parallel (LDC136) £395 / Serial (LDC441) £3.95 / USB (LDC644) £2.95

NEW! USB & Serial Port PIC Programmer

USB/Serial connection. Header cable for ICSP. Free Windows XP software. Wide range of supported PICs - see website for complete listing. ZIF Socket/USB lead not included. Supply: 16-18Vdc.
Kit Order Code: 3149EKT - **£39.95**
Assembled Order Code: AS3149E - **£49.95**

NEW! USB 'All-Flash' PIC Programmer

USB PIC programmer for all 'Flash' devices. No external power supply making it truly portable. Supplied with box and Windows Software. ZIF Socket and USB lead not included.
Assembled Order Code: AS3128 - **£44.95**

"PICALL" PIC Programmer

"PICALL" will program virtually all 8 to 40 pin *serial-mode* AND *parallel-mode* (PIC16C5x family) programmed PIC micro controllers. Free fully functional software. Blank chip auto detect for super fast bulk programming. Parallel port connection. Supply: 16-18Vdc.
Assembled Order Code: AS3117 - **£24.95**

ATMEL 89xxxx Programmer

Uses serial port and any standard terminal comms program. Program/ Read/ Verify Code Data, Write Fuse/Lock Bits, Erase and Blank Check. 4 LED's display the status. ZIF sockets not included. Supply: 16-18Vdc.
Kit Order Code: 3123KT - **£24.95**
Assembled Order Code: AS3123 - **£34.95**

No.1 FOR KITS

www.QuasarElectronics.com

Secure Online Ordering Facilities • Full Product Listing, Descriptions & Photos • Kit Documentation & Software Downloads

Waiting for ZigBee

Add-on home automation

Dr. Thomas Scherer

Home owners who are not building from scratch or who do not want the expense of installing network cabling for their home automation system are left with wireless based controllers or systems that communicate over the existing mains wiring. All of these methods have their advantages and disadvantages.

Figure 1. X10 modules from Marmitek: A radio receiver for remote control, switchable unit, USB module and remote controller.

You have probably heard a variant of the joke where the employee praises the efficiency of their company by saying that their operating methods are so good the company would run smoothly even if there were no customers… The Japanese Tron house [1] is a case in point here; this futuristic building is the last word in home automation, using over 1000 (!) CPUs the house functions perfectly well even without any occupants at all. The project is solely funded by Japanese industry and is fully networked with every conceivable refinement down to mirror lighting in the bathroom which adapts to the preference of each occupant. The project is a test bed for industry to try out any new idea or home automation device that may have been dreamt up during a feasibility study. Hitachi developed a 32-bit processor specifically for this project, which has been used for industrial applications in their home market but so far we are still waiting for the first Tron-inspired product suitable for domestic use. Planning for the house began in the Orwellian year of 1984 and the building was finished in 1988. Five years later the project was ended but not before plans for an even more ambitious house were finalised. Looking further into the future a Tron town is envisioned which could contain millions of interconnected home networks.

American research into 'intelligent housing' seems to be progressing at a less ambitious pace with the NAHB sponsored Smart House which uses novel switchable supply services for improved safety. Another area of research is the specification of bus standards suitable for home automation like the CEBUS or the European variant EHS. Both of these standards are discussed in detail on the Internet but so far we have seen no consumer products available using them.

Figure 2. A top-of-the-range system from Busch-Jäger.

What's out there?

The first choice for a home automation network on the grounds of data speed, security and stability would be a dedicated wired network. The cost of installing such a network is however prohibitively high for the average home owner. Cabled networks are almost universally used in high-tech office environments so costs of the network components are corresponding high.

The cheapest solution is to use the existing mains wiring to transfer control signals this is known as PLC (Power Line Communications or Carrier). In applications where the wiring is used for high speed data transfer to convey broadband internet (e.g. the HomePlug standard) a transfer rate of 100 Mbit/s is possible over short distances. Home automation systems signalling over the mains (e.g. X10) however employ a very low data rate which is often just not fast enough. These systems come with switched mains outlets, sensors and actuators (see box).

Where costs of network cabling are too high or where

PLC Systems

The American designed X10 home automation PLC system is already more than 30 years old and still enjoys a strong following in its homeland. X10 products designed for the American market usually will not operate in Europe because of the difference in mains voltage. UK specific European X10 equipment is available from a number of suppliers (Google X10 and UK). A selection of X10 devices (with European mains outlets) are shown in Figure 1. The big disadvantage of the X10 system is the very slow communication speed. Communication occurs only on the zero crossing of the mains voltage so a simple command to switch an output can take 100 ms.

Figure 2 shows a top-of-the-range PLC system (with continental-style mains outlets) from the company Busch-Jäger.

The big advantage of this system is that it can be retro-fitted in a building because it uses the existing mains wiring for both power and control signal distribution. This method of control distribution is also a source of weakness; the signal is modulated in the range of 30 to 500 kHz travelling along the mains cabling where it must do battle with sources of interference produced by motors and other electrically 'noisy' devices in the same building.

Cable runs greater than 20 m require filters and mains bridges.

PLC systems are not suitable, wireless systems offer a good alternative. In Europe two bands are available at 433 MHz and 868 MHz. Systems such as those produced by ELV Germany along with ZigBee and Z-Wave use these bands (see below). One disadvantage of the 433 MHz band is that continuous wave transmission is allowed which makes the system prone to interference issues compared to 868 MHz systems.
This leaves the familiar WiFi or WLAN wireless 802.11 a/b/g/n network used to link computers in both domestic and commercial environments. Although the RF node hardware is now relatively cheap it requires a fairly sophisticated, processor intensive software driver. Power consumption for the network is therefore quite high. On these grounds alone there has been practically no commercial exploitation of WLAN infrastructure for home automation systems so far.

Is ZigBee the answer?

From the four possible methods of home automation networks shown in **Table 1** we can choose practically between the middle two options; either a PLC solution (e.g. X10) or a wireless solution (e.g. FS20). Both X10 and FS20 have a serious flaw in the communication protocol; the majority of controllers do not implement any form of 'handshake' which means that communication is one-way only. Consequently there is no way of knowing if the signal got to the receiver and successfully performed the operation or if an error occurred. This is not so bad if you are holding the controller in your hand and can see the equipment you want to switch but if the equipment is out of sight or worst still if the house is controlled from a low-cost USB plug-in controller or even an expensive dedicated control centre, there is no guarantee that the commands have been performed successfully. The X10 standard does allow two-way 'acknowledge' communication but this has only been implemented in some of the newer systems.
The ZigBee and Z-wave (see box) systems suitable for home automation are now starting to make an appearance, it is possible to purchase small radio modules for these systems quite cheaply but integration into complete systems and consumer products is still a little way off.
At the moment many of the modules are available for dedicated homebrew specialists and engineers to start building their own wondrous creations, some of which no doubt, will find their way onto the pages of *Elektor Electronics* in the months to come.
Assuming you do not have the spare time to design your own system and can put the dream of your own personal Tron house on hold for a little while longer then it is not a bad idea to wait until the ZigBee or Z-Wave based systems come on stream and costs (hopefully) begin to fall.

Table 1.

Network type	Stability	Security	Flexibility	Capacity
Bus system	+	+	0	+
Power Line (PLC)	–	0	+	0
868 MHz wireless	0	0	+	+
WLAN	0	+	+	+

Figure 3.
The ELV FS20 system distributed by Conrad. This selection represents just a sample of the available modules.

868 MHz wireless

The FS20 system from ELV is distributed by Conrad Electronics and is quite easy to install. The system includes switched and dimmable mains outlets, a hand-held remote, door chimes, sun blind controllers and modules that can work together to form a home security system. The product range is very good and relatively well priced but the module's appearance will probably not win any design awards (Figure 3). A similar (but not compatible) system is produced by Moeller of Austria. Both of these are supplied with mainland Europe style mains outlets.

ZigBee and the competition

The ZigBee alliance is a group of companies who together have defined the ZigBee wireless based home automation standard compatible with IEEE-Standard 802.15.4. The short range communication (range 10 to 50 m) uses very little energy and the highly integrated electronic modules are simple to use [3]. ZigBee operates on 868 MHz or 2.46 GHz in Europe and 915 MHz or 2.46 GHz in the USA. The two lower frequency systems are obviously not compatible and at the higher band there is some overlap between ZigBee and WiFi which can be avoided by careful channel assignment. ZigBee has superior speed compared to PLC systems and the standards are better defined than the FS20 system. Especially interesting for the homebrew fan is the low-cost radio modules which have the potential to be used for any number of interesting data communication (> 20 kb/s) applications.

Try Googling 'home automation' and ZigBee and you will find any amount of technical information and news items but very little information on the availability of the radio modules or a finished ZigBee product (e.g. a remotely controlled mains outlet).

The company Zensys have developed their own system similar to ZigBee called Z-wave. This system uses 868 MHz in Europe and 908 MHz in the USA. An attractive feature of the system is its low cost of components (< 3 $ for a radio module) and low μW power consumption means that battery operation is feasible. Zensys is backed by a large part of the ZigBee alliance and has ensured that Z-wave capable devices from different manufacturers are interoperable which is not guaranteed with ZigBee devices.

Figure 4. A selection of switches and socket, sadly none network enabled.

What's on the high street?

We carried out a small survey to find just what systems are available from high street retailers and from builders markets for the home-owner or DIY enthusiast. In the majority of the larger superstores it is possible to pick up a fairly simple hand-held wireless remote controller which manages up to four switched mains outlets (usually three on/off and one dimmable). Along with these controllers it is also possible to find wireless doorbells, garage door openers, curtain opener/closer and security systems. All of these are manufactured by different companies so that they are operated by a single controller and cannot be integrated and switched by a centralised controller (indeed they are generally designed to respond to the signal from one unique transmitter to avoid interference to/from neighbouring systems). The design philosophy of a home automation system is the reverse and seeks to integrate the operation of these sub-systems in a meaningful way. When it comes to buying the hardware for a home automation system the picture across Europe seems to be the same; whether you look in a large DIY outlet in Maastricht, Holland or in your local branch of Homebase or B&Q in the UK. You are sure to find any number of standard electrical outlets and manually operated switches as far as the eye can see (**Figure 4**) but when it comes to home automation there is sadly nothing to be seen; it would seem that the average homeowner is quite content to carry on turning things on and off by hand. Enquiries are met with the response that there has not been any call for such products.

The picture across Europe in the DIY market seems to be the same — in another outlet there was evidence of remote controlled mains sockets as mentioned earlier and wireless thermostats which could be retro-fitted to existing heating systems and wireless PIR based movement detectors (**Figure 5**). When it comes to home automation there is no evidence at all that such systems have made any inroads into the mainstream building and DIY market so far. With an ever increasing number of remote control units piling up on the coffee table we look forward to a time when a more integrated approach removes all the clutter and simplifies our lives but don't hold your breath, it looks like it may take another three or four years at least before it is a reality.

Figure 5. Another DIY store with wireless units but no integrated home automation systems.

(060324-I)

Web Links

[1] www.aec.at/en/archives/festival_archive/festival_catalogs/festival_artikel.asp?iProjectID=8681

[2] http://depts.washington.edu/dmgftp/publications/html/smarthouse98-mdg.html

Further Reading

[3] Zigbee with Xbee, Elektor Electronics November 2006

[4] Zigbee Transceiver, Elektor Electronics March 2007

The Anatomy of HEX Files

How did that go again?

Luc Lemmens

This month a story that really should not be necessary. When we develop software for a microcontroller, the compiler or assembler will, as final output, create a file that we need to program into the program memory of the controller. In the vast majority of cases this file will have the so-called Intel-HEX (Intellec) file format, a file that in addition to the machine code itself also includes the destination addresses showing where this code has to be located.

The file also incorporates checksums that allow the integrity of the code to be verified. In reality it should not be of interest to the programmer to know the details of the file format, just program it in the memory and Bob's your uncle. But it is different if the assembler or compiler appears to generate something different from what we expect. Sometimes you just cannot avoid browsing through the HEX-file to find out what exactly is going to end up in the program memory.

Sometimes this file also contains configuration bits for the controller that configure the oscillator, watchdog, copy protection and related things. Because the need to unravel the inner workings of a HEX file are so infrequent, you either need to look up the details every time or try very hard to remember them.

A HEX file is built up out of records. Each record contains a record-type, a record-length, the address at which the data has to be located and a checksum. There are six different types of records, not all of which are necessarily used all the time:

- Data record (all formats)
- End of File record (all formats)
- Extended Segment Address record (not in 8-bit format)
- Start Segment Address record (not in 8-bit format)
- Extended Linear Address record (only in 32-bit format)
- Start Linear Address record (only in 32-bit format)

Every record appears as shown below.

RECORD MARK ':'	RECLEN	LOAD OFFSET	RECTYP	INFO or DATA	CHKSUM
1-byte	1-byte	2-bytes	1-byte	n-bytes	1-byte

The start is indicated with ':'. RECLEN indicates the number of data bytes. LOAD OFFSET indicates with 16 bits the offset of the destination of the data bytes and only has meaning in data-records, in all other records this field is '0000'.

RECTYP indicates the record type:
'00' = Data record
'**00**' = Data record
'**01**' = End of File record
'**02**' = Extended Segment Address record
'**03**' = Start Segment Address record
'**04**' = Extended Linear Address record
'**05**' = Start Linear Address record

The INFO/DATA-field consists of a number of bytes (see RECLEN), the interpretation of which depends on the record type.
The checksum is calculated from the two's complement of the bytes from the fields starting at RECLEN up to and including the last INFO/DATA-byte. When you add the sum of these bytes to the checksum you will get a result of '0'.

Extended Linear Address Record (only in 32-bit format)

RECORD MARK ':'	RECLEN '02'	LOAD OFFSET '0000'	RECTYP '04'	ULBA	CHKSUM
1-byte	1-byte	2-bytes	1-byte	2-bytes	1-byte

In the 8-bit HEX-files two bytes (LOAD OFFSET) are available to indicate the address. In this record type the ULBA (Upper Linear Base Address) defines bits 16 to 31 of the address, the LOAD OFFSET of the subsequent data records then completes bits 0 to 15 to give the final absolute address.

Extended Segment Address record (16- and 32-bit formats)

RECORD MARK ':'	RECLEN '02'	LOAD OFFSET '0000'	RECTYP '02'	USBA	CHKSUM
1-byte	1-byte	2-bytes	1-byte	2-bytes	1-byte

The 16-bit Extended Segment Address record specifies bits 4 to 19 of the Segment Base Address (SBA), bits 0 to 3 of the SBA are '0'. The LOAD OFFSET of the subsequent data records then determines the final address.

Data record (all formats)

RECORD MARK ':'	RECLEN	LOAD OFFSET	RECTYP '00'	DATA	CHKSUM
1-byte	1-byte	2-bytes	1-byte	n-bytes	1-byte

This contains a maximum of 256 (RECLEN) bytes of data, LOAD OFFSET determines (with or without ULBA or SBA) where the first data byte of the record will go in memory. Subsequent data bytes go sequentially after this address at increasing address locations.

Start Linear Address record and Start Segment Address record are not used with microcontrollers and are therefore outside the scope of this article.

End of File record (all formats)

RECORD MARK ':'	RECLEN '00'	LOAD OFFSET '0000'	RECTYP '01'	CHKSUM 'FF'
1-byte	1-byte	2-bytes	1-byte	1-byte

As the name already gives away, this record marks the end of the program file.

Well, that ends the 'refreshment course'. And now just keep your fingers crossed that you will never or at most seldom need this knowledge! In the interest of full disclosure: there are many more HEX-file formats, but the Intel-format is the most common one.
Engineers are fond of standards and that is why they can never invent enough of them...

(075034)

Watchdog in the Meter C

Jeroen Peters

Many of us see our electricity consumption increasing, and with it our electricity bills. That's why it's useful to improve your insight into your consumption. But existing energy meters in the form of an adapter that you can plug a device into cannot be used to measure the consumption of ceiling lamps and other loads connected directly to the mains. The Wireless Energy Monitor (WEM) described here remedies this problem.

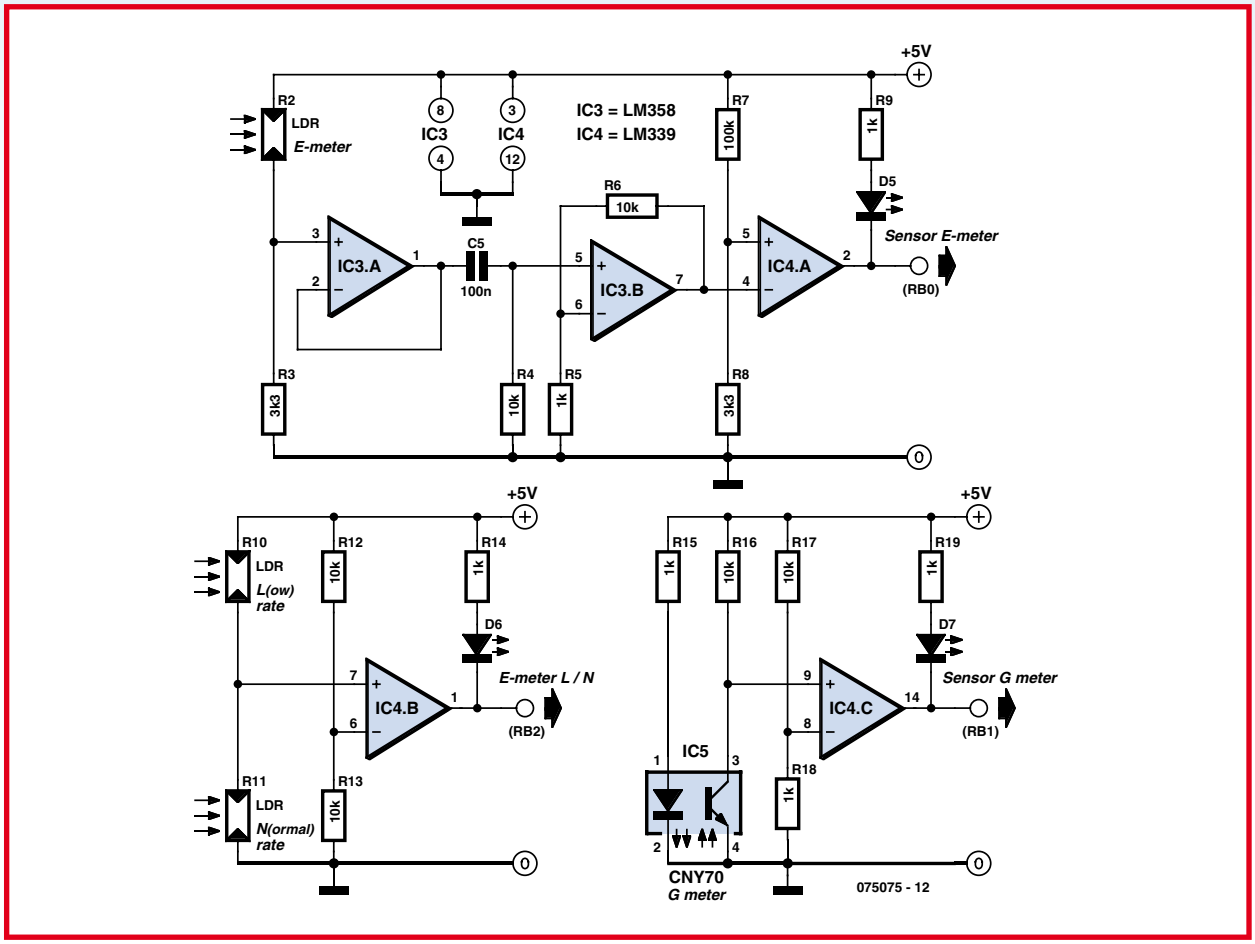

Figure 1. Sensor circuits of the Wireless Energy Monitor, which is located in the meter cabinet.

The Wireless Energy Monitor consists of several sensors with a transmitter and a receiver. The transmitter and the sensors are placed in the meter cabinet next to the electricity meter and gas meter. You can use the doorbell transformer to power the transmitter. Thanks to the wireless link, the receiver can be used anywhere in the house to show your current power consumption on a LCD screen. You can thus use it in every room to see the effect on energy consumption of switching something on or off. The receiver is powered by a 9-V battery.
The transmitter and receiver are both based on a PIC microcontroller. Each circuit is fitted with an RS232 connector for programming the PIC. The programmer for this is a very simple design that you can easily build yourself.

Operating principle

Most electricity meters in current use have a LED that flashes at a rate proportional to the amount of electricity that is being used. The number of pulses per kilowatt-hour (pulse/kWh) is stated on the meter. For example, the meter shown in the photo (**Figure 7**) outputs 600 pulses per kWh. These pulses are recorded using LDR R2 in **Figure 1**. We also want to know whether the electricity will be billed at rate I (usually the High rate) or rate II (usually the Low rate). The designations for the High and Low rates may differ between countries and even between electricity suppliers — we've seen Peak/Off-Peak, Normal/Reduced; Daytime/Other, to mention but a few. Anyway, for our purpose, we fit another two LDRs (R10

abinet Wireless Energy Monitor

and R11) to the electricity meter (see **Figure 8**).
With the gas meter, we make use of the small reflecting dot in the '6' digit of the rightmost counter wheel of the gas meter. A reflective sensor (IC5) shines a beam of infrared light on this counter wheel. The phototransistor in the reflective sensor sees the reflective dot, which allows the gas consumption to be measured with a resolution of one hundredth of a cubic meter (m^3).
The transmitter circuit measures the time between successive pulses, looks to see which rate is currently applicable, and maintains the gas consumption count. It then sends this information via the radio transmitter module. The receiver converts the time interval between the last two pulses from the electricity meter into the current power consumption (watts). It then shows the result on the LC display, taking the currently applicable billing rate into account. It also shows the internally accumulated counter values for the electricity gas meters on the display. These counters start at zero when the transmitter is first connected. This makes it easy to keep track of the energy consumption without having to check the meters. To make everything really easy, the receiver also has an RS232 connector that can output all this data to a PC or other equipment each time new data is received. **Figure 2** shows how everything is linked together in schematic form.

Transmitter circuit

For description purposes, the transmitter circuit can be broken down into two functional parts: the basic transmitter section together with the power supply (which is tapped off from the bell transformer), as shown in **Figure 3** and **Figure 11**, and three circuits for the sensors fitted to the electricity and gas meters (**Figure 1**).

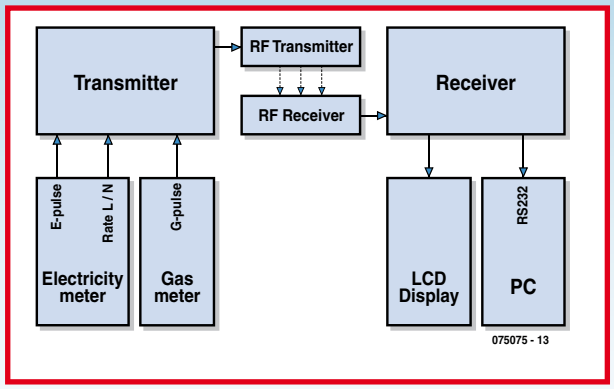

Figure 2.
Block diagram of the transmitter and receiver of the Wireless Energy Monitor.

The transmitter is built around a Microchip 16F84. This IC is readily available and easy to program in a DIY environment without any need for an expensive programmer. A 4-way connector is provided in the circuit for programming the PIC.
The complete transmitter circuit is powered from the bell transformer, which is usually located in the meter cabinet and does not have to supply any power most of the day. A power source salvaged from other equipment can also be used in place of the bell transformer.
As the voltage is rectified by D1–D4 and then stabilised by IC1, you can use almost any power source that can provide an AC or DC voltage in the range of 7.5 V to 20 V. The combined current consumption of the transmitter, sensors and LEDs will never exceed 100 mA.
R1 pulls Master Clear Reset (MCLR) to +5 V. X1, C3 and C4 provide a stable 4-MHz clock signal for the PIC. The transmitter uses an 868-MHz set from Conrad Electronics (order # 190939). This set includes a transmitter module and a receiver module, and it has sufficient range

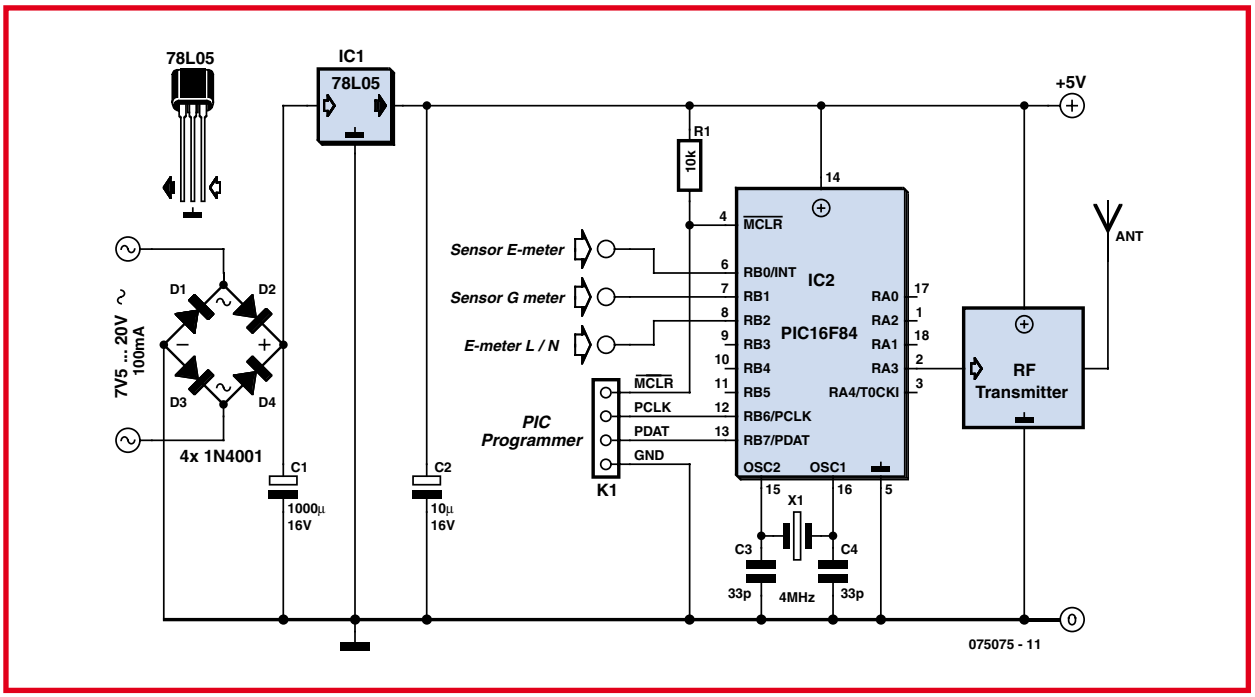

Figure 3.
The schematic diagram of the transmitter unit consists of nothing more than a PIC and a quartz crystal.

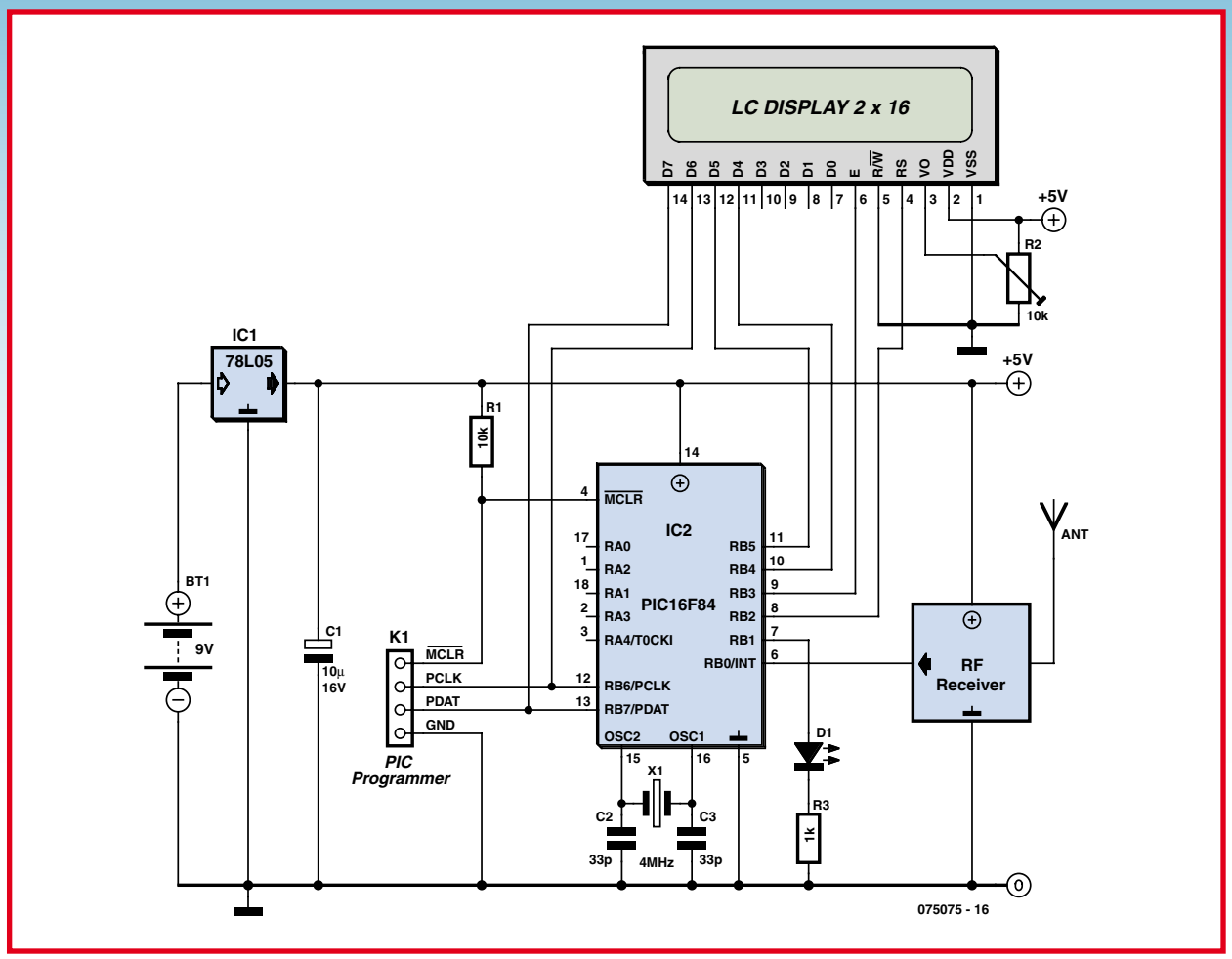

Figure 4.
The receiver circuit is also very simple. There are few components other than the PIC.

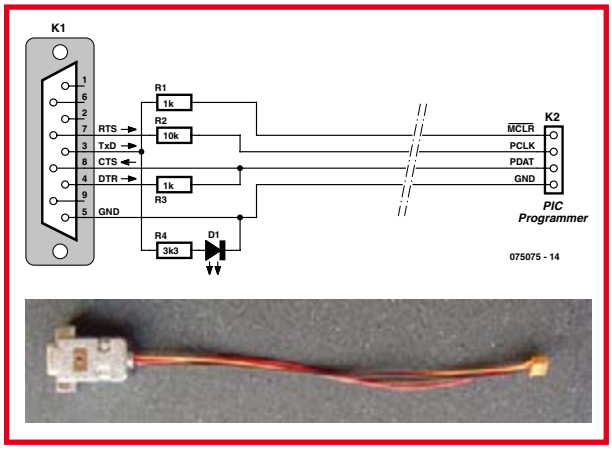

Figure 5.
Pay careful attention to correct wiring of the programming cable.

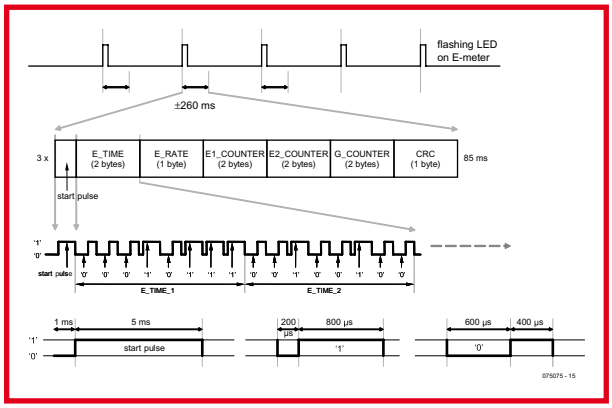

Figure 6.
Structure of the message sent to the receiver by the transmitter.

for in-house use. The range can be extended somewhat by straightening out the curled antenna. You can also replace the supplied antenna with a straight piece of insulated wire exactly 8 cm long (quarter-wave antenna). The sensors are connected to RB0–RB2 of the PIC.

The circuit shown in Figure 1 is used to detect the flashes that indicate the electrical power consumption. Fit LDR R2 on the electricity meter directly in front of the blinking LED (see **Figure 8**). In combination with R3, it forms a voltage divider whose junction voltage rises when the LED of the electricity meter emits light. IC3a buffers this voltage, while C5 and R4 ensure that its quiescent value is 0 V. This makes the circuit considerably less sensitive to ambient light, which is handy if the door of the meter cabinet happens to be open.

IC3b amplifies the pulse by a factor of 11, equal to (10 kΩ + 1 kΩ) ÷ 1 kΩ. The resulting pulse is large enough to cause comparator IC4a to switch states. A small signal is adequate for this purpose because the inverting input of IC4a is connected to a reference voltage of only 0.16 V. This reference voltage is taken from voltage divider R7/R8. When the LED of the electricity meter flashes, the output of the comparator goes low briefly and LED D5 flashes briefly. The PIC also sees a short '0' level on RB0.

Many electricity meters have dual meter mechanisms (for daytime and nightime rates). The circuitry around LDRs R10 and R11 is used to see which mechanism is active, and thus which rate is currently applicable. They must be fitted above the LEDs of the electricity meter that indicate which meter mechanism is currently active (see Figure 8). As only one of the LEDs is on at any given time, the junc-

tion voltage of this voltage divider will always be either higher or lower than the 2.5-V reference voltage set by R12/R13, which is applied to the inverting input of comparator IC4b. When rate I is applicable, LED D6 is off and a '1' level is present on RB2, and when rate II is applicable, LED D6 is on and an '0' level is present at RB2.
IC5 in Figure 1 is used to measure gas consumption. It senses the reflecting dot in the '6' digit of the rightmost counter wheel of the gas meter (see **Figures 9** and **10**). IC5 is a reflective sensor that shines a beam of infrared light on the dial and detects how much light is reflected back. When the reflective surface of the gas meter dial is in front of IC5, the transistor in IC5 conducts and the voltage on the non-inverting input of comparator IC4c drops below the 0.45-V reference voltage generated by voltage divider R17/R18. The output of comparator IC4b will thus go low, and LED D7 will light up. The PIC processor will also see a '0' level on RB1.

Receiver circuit

Another 16F84 is used in the receiver circuit (**Figures 4** and **12**). This circuit also includes a 4-way connector for programming the microcontroller. The receiver module from the Conrad set is used to receive the RF signal from the transmitter. Don't forget to fit an insulated wire exactly 8 cm long as an antenna.
The circuit is powered by a 9-V battery. The combination of a 78L05 and C1 generates a stabilised 5-V supply voltage from the battery voltage. If you use an LP2950CZ5.0 instead, the voltage regulator will be much more efficient and the battery will last almost 50% longer.
The key player in this circuit is again the PIC16F84. It receives the information from the electricity and gas meters via the Conrad radio receiver. R1, C2, C3 and K1 have the same functions as in the transmitter circuit. The LCD is connected directly to the PIC and driven in 4-bit mode (see 'Software' below). The contrast of the LCD screen can be adjusted with R2.
Finally, connector K2 is provided to allow the received data to be transferred directly to a PC via the COM port. The PIC will transmit the full set of data to the PC each time the electricity meter generates a light pulse. You can omit this connector if you do not plan to use a PC. LED D1 lights briefly each time a message is received correctly from the transmitter.

Software

The software for the transmitter and the receiver is available as assembly-language source code and hex files, which can be downloaded from www.elektor.com and easily loaded into the PIC microcontrollers. You can use the NTPICPROG.EXE program from Andreas Hansson [1] for this. If you have to modify the source code, you can use the MPLAB IDE environment, which can be downloaded free of charge from the Microchip site [2].
The PICs are programmed via the COM port of the PC. You will need a simple programming cable for this (see **Figure 5**).
Plug the 9-way D connector into the COM port of the PC, and slide the other connector over 4-way PCB connector K1 on the transmitter or receiver board. Make sure it is fitted correctly, which means with the GND lead on the proper side! Now you can program the PIC quite easily using NTPICPROG.EXE and the .hex file. You should use a desktop PC, since many notebook PCs only have 3.3-V levels on the signal lines of the COM port, and that's too

7

8

9

10

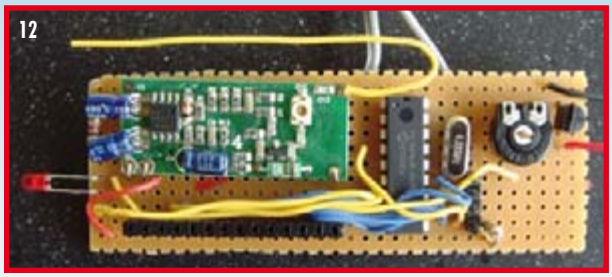

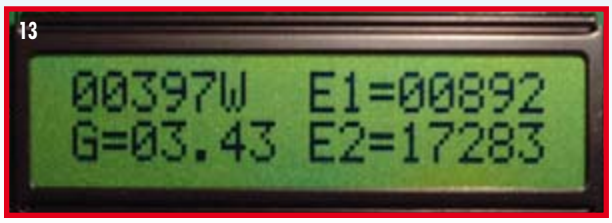

low. Also make sure that power is applied to the PIC during programming. With the transmitter, you can temporarily connect a 9-V battery to the supply .lines that would otherwise be connected to the bell transformer.
The software in the transmitter unit measures the time between successive pulses from the flashing LED of the electricity meter. It sends the following data to the receiver immediately after each measurement:

- The time between two electricity pulses (E_TIME_2 and E_TIME_1). The elapsed time between two pulses from the electricity meter (in milliseconds) is equal to E_TIME_2 × 256 + E_TIME_1, with a maximum value of 65,535 ms.

- Rate I/II indicator (RATE). This byte is '1' for rate I and '2' for rate II.

- Electricity meter rate I count (E1_2 and E1_1). This count indicates how many pulses have been issued by the electricity meter for rate I since the transmitter was switched on. It is equal to E_1_2 × 256 + E_1_1, with a range of 0 to 65,535. The count starts again at 0 after it reaches 65,535. The count must be divided by the number of pulses per kWh in order to determine the number of kilowatt-hours.

- Electricity meter rate II count (E2_2 and E2_1). This is as described above, but for rate II instead.

- Gas meter count (G_2 and G-1). This is as described above, but for the gas meter instead, and the count rolls over to 0 after reaching 9,999. The counting unit is one-hundredth of a cubic metre (0.01 m^3).

- A CRC control byte (CRC).

Figure 6 shows the structure of the transmitted message. The receiver converts the time interval between two light pulses from the electricity meter into the amount of power currently being consumed in the house. As this conversion depends on the type of meter (number of pulses per kWh), this parameter must first be configured in the software. The default value in the software is 600 pulses/kWh.
The photo of the LCD screen in **Figure 13** shows the structure of the displayed information. The first line shows the power consumption and the count of the number of pulses of the first meter mechanism of the electricity meter. The second line shows the count for the gas meter and the count for the second meter mechanism of the electricity meter.
All of the bytes received from the transmitter are also sent to the PC via the serial link. This data arrives at a rate of 9600 baud with no parity bit, 8 bits per byte, and 1 stop bit.

Practical aspects

The contrast of the LCD screen of the receiver can be adjusted with trimpot R2. When you switch on the energy monitor, it will immediately start counting and recording the number of cubic metres of gas and electrical power consumption.
When everything is switched off at night, you can see how much is still being used by 'surreptitious loads'. This is also a good way to see whether the PC is actually switched off or the heating is still on.
You can also track down real energy gluttons and take suitable measures. For example, you can replace lamps that are often on by low-energy lamps, or switch off equipment instead of leaving it in standby mode. You can calculate the difference in electricity consumption from the data shown on the LCD screen.
As all the data can be read in by the PC, you can create your own household energy consumption database to indicate whether your household is using energy more economically. A nice example of a system of this sort is shown in reference [3]. You can also see the times when energy consumption peaks occur.

(075075-1)

Web links:

[1] http://home.swipnet.se/~w-24528/NTPicprog
[2] www.microchip.com
[3] www.bwired.nl
[4] www.elektor.com

About the author

Jeroen Peters is a first-year student of Computer Engineering at HAN University in the Netherlands. He is interested in practical applications of electronics, especially in home automation. Jeroen created the basis for the circuit described here for his specific research project at the HAVO (senior general secondary school).

Build your own Robot!

Vex Robotics Kits

• Meccano™ Compatible • Computer Control
• Radio Control • Tank Treads • Hydraulics

FUN FOR THE WHOLE FAMILY!

"Imagination is more important than knowledge"
Albert Einstein

VEX ROBOTIQ

Internet Technical Bookshop, 1-3 Fairlands House, North Street, Carshalton, Surrey SM5 2HW

W: www.robotiq.co.uk E: sales@robotiq.co.uk T: 0208 669 0769

componentbin.com

Online Store!

Our online store contains an ever expanding variety of products designed for engineers, hobbyists and students. These include:

- ARM Development Systems
- Ethernet Modules
- RF Modules
- Graphic LCD Displays (With example software!)
- Home Automation
- Power Conversion
- Components & Connectors
- And Much More!
- Educational Discounts Available

Full product support with reference software and secure online ordering to kickstart your development.

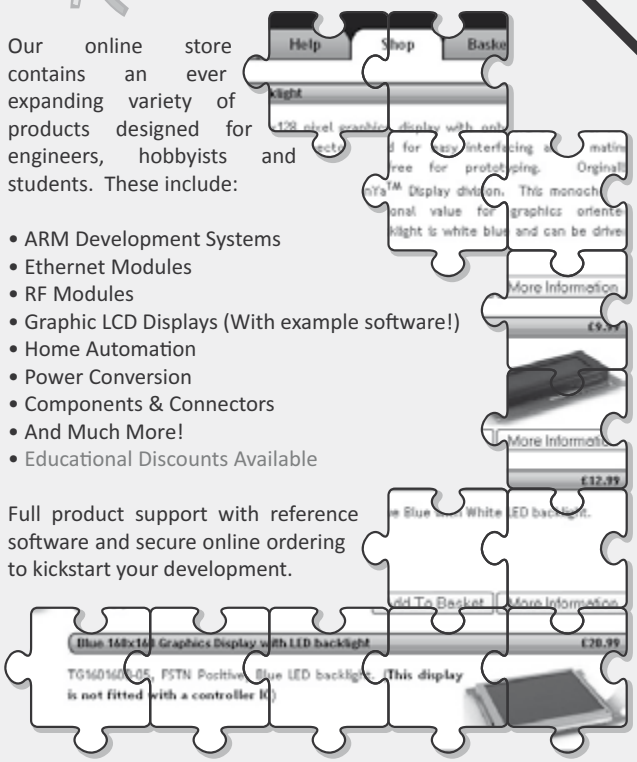

www.componentbin.com
+44 (0) 1354 778224

ANDRE LAMOTHE'S
XGAMESTATION
LEARN STEP-BY-STEP HOW TO BUILD AND DESIGN YOUR OWN VIDEO GAME CONSOLE!

Design inspired by the Atari 800/2600, Sinclair ZX Spectrum, Apple II & Commodore 64!

Parallax SX Key Compatible!

INCLUDES:
- Tools, Demos & Utilities!
- Great for Hobbyists AND Students!
- The Fun Way to Learn Embedded Systems!
- Fully Assembled XGS Micro Edition Unit!
- Complete Software Development Kit!
- eBook on Designing the XGS Console!
- Cables and Power Supply Included!

eBook Included!
Development Kit
Complete Kit

WWW.XGAMESTATION.COM
PH: 925.736-2098 | SUPPORT@NURVE.NET
NURVE NETWORKS LLC 402 CAMINO RAMON WEST DANVILLE, CA 94506 USA

elektor electronics
leading the way

ISBN 978-90-5381-214-3
£18.90 / US$ 37.90

NEW

CD-ROM Ethernet Toolbox

Software Tools en Hardware Tips

This CD-ROM contains all essential information regarding Ethernet interfaces! To help you learn about the Ethernet interfaces, we have compiled a collection of all articles on this topic that have appeared in Elektor Electronics and complemented them with additional documentation and links to introductory articles on Ethernet interfaces.

It includes a collection of datasheets for dedicated Ethernet interface ICs from many different manufacturers. To help you with your own projects, the CD-ROM provides a wealth of information about connectors and components for the physical layer (PHY) and specific software tools for use with the Ethernet (Software).
All of the documents are PDF files.

- Controllers & Microcontrollers
- Boards with Ethernet connectivity
- Serial to Ethernet
- CAN to Ethernet
- Connectors
- Physical Layer Tranceiver
- IEEE 802® standard

Order now using the Order Form in the Readers Services section in this issue.
Elektor Electronics (Publishing)
Regus Brentford
1000 Great West Road
Brentford TW8 9HH
United Kingdom
Tel. +44 208 261 4509

See also www.elektor-electronics.co.uk

'Profiler' Tips & Tricks

'Profiler', a milling machine from a kit was published in the January and February 2007 issues of Elektor. Profiler is a joint undertaking of Elektor and Colinbus. At the time of writing, more than 900 people have placed orders for a Profiler kit. Some knowledgeable users have found the 'Profiler' topic on the Elektor forum suitable for exchanging all the latest on their machines. Here's a compilation of the best tips and tricks we came across.

One of the best documents to read for budding Profiler users may be found on the web pages by Reece Robinson from New Zealand who kindly supplied the necessary url on our forum. A large section of this article should be credited to Reece!

PCB tools

When I ordered the Profiler I also ordered a number of tools so I could start making PCBs the minute I had assembled the kit. As I am a newbie at milling PCBs I researched what I could from the Internet and came up with the following initial list:

10x PCB engraving tool – Normal Line Milling 36 mm, 0.2 – 0.5 mm (ref. COLCT0001)

Drill Bits 38 mm long
5x d = 0.80 mm (ref. COLCT0025)
5x d = 1.00 mm (ref. COLCT0028)

Contour Router 38 mm long
1x d = 1.00 mm (ref. COLCT0013)
1x d = 2.00 mm (ref. COLCT0015)

End Mill 36 mm long
2x d = 1.00 mm (ref. COLCT0007)
1x d = 2.00 mm (ref. COLCT0008)

Having milled my first PCB I think this was a good initial list.

Not really IKEA

When the kit arrived (all 30 kilograms of it!) my first task was to inventory all the parts. Everything was in order so I went about building it. I was initially concerned that the instructions were only a series of photos/pictures but once I got started my fear was not realised and it all went together very quickly.

The one lesson I got from this phase is that it is very important that when building the *Z* assembly that you ensure there is **no** slack in the roller system. Make the adjustment to the eccentric wheel as necessary to ensure there is no play. Failure to do this in the early stage will leave you having to disassemble most of the Profiler later to access the adjustment mechanism.

The mechanical construction is going to take you between 10 and 20 hours, depending on your level of experience – it's a bit more complicated than a unit from IKEA! Very rarely, parts are either missing, or replaced with others not described in the documentation.

The drawing of the *Z*-axis limit switch is reversed.

A good construction procedure is to build the electronics first so as to be able to operate each of the axes once it is assembled up but not yet tightened, again, to allow easier access to the adjusting elements.

Software

Once I completed assembling the kit my attention turned to the two software applications ColiDrive and ColiLiner.

ColiLiner
During the installation of ColiLiner (Standard 1.0 Rev. 20070301) you are given the choice of install location. I recommend you don't choose anything other than the default location. It turns out that the installer does not update the folder locations in the CBPCBF.INI file located in the ColiLiner\SYS directory. The software does not function correctly with incorrect settings here.

Once all was working correctly I found that ColiLiner didn't require any changes to its configuration before I used it.

This software is relatively simple to use for what I needed. As I currently only make single sided PCBs all I need to do here is load the bottom artwork layer Gerber file and the drill file then align the drill holes with the pads. This is a simple procedure that is described in the software manual.

Once the design is 'Contoured' and the 'Fabrication Output' file has been produced then it's off to ColiDrive.

Note: The software manual recommends that you use the 'mill as text' option for any text that appears in your design. There appears to be a bug with this feature as the results I get are unreadable. This feature sounds good but it just didn't work for me.

ColiDrive
ColiDrive (my version: 2.2.0.19) is where you will spend most of your Profiling time.

Tool Configuration
The first task was to configure ColiDrive with the tools I have. The Tool database configuration is accessed from the Setup → Tools menu option. Here I selected the 'used tools' tab and entered the tools I had purchased (listed above). This list is

then made available for ColiLiner. Refer to the software manual for more details.

ColiDrive Machine Properties

After hours of trial and error I think I have settled upon the machine settings that will give good milling results.

In the Program Setup & Options dialog, accessed from the Setup → Machine Properties menu, I set the maximum *X*, *Y* and *Z* speeds all to 10000 micro m/s. I found this minimised the chance of the line milling tool skating on top of the copper instead of breaking the surface and removing material.

In the 'Options' tab I selected the 'Line-by-line' file processing strategy. This gives you the ability to pause the machine or cancel the job. It does not unfortunately allow you to back up an arbitrary number of steps to repeat.

I also selected the 'Do Nothing' option in the 'When Finished Go To' section of the dialogue. This was handy because it gives you the option to repeat a whole segment of the processing using the same material origin. I found this useful in the trial and error learning phase.

In the 'PCB Post Processor' tab you will see the settings for PU, PD and Drill. My settings are PU = –2000, PD = 300, Drill 2000. It is important to note here that when you load your PCB file and provided these values in the dialog that pops up — you cannot update these values from the Program Setup & Options dialogue. The software allows you to change them, but any changes here will have no effect on the currently loaded project. You must close the project and reload the file. I wasted some copper and tools learning that lesson.

Settings

ColiDrive v 2.2.0.19 seems to be the most complete version at the time of writing.
Windows 2000 with SP4 is reported to work correctly, but some problems have been reported with ATI or S3 cards.
To avoid crashing (caused by data saturation in the controller when handling big files), ColiDrive must be configured as follows: follow Communication Setup Machine properties: on the second tab (options/strategy) select 'realtime communication' instead of 'transfer file to controller'.
If you want to send commands from a terminal, the communication between the PC and the controller card needs to be configured thus: **38400,8,N,1** – but apparently ColiDrive simply needs a free communication port with Profiler connected up and initialized.
Our Dutch friends are trying to make Profiler work with an Open Source application. Another correspondent says that, in the light of the huge demand, it is possible that the applications running Profiler might in the future accept the much more commonly used G-Code.

Z homing

One thing I should explain is how I choose PD (pen down) to be 300. This value is very much tied to the manual procedure I perform for setting the *Z* home when asked by the ColiDrive software. Setting the Z home is one of the most critical steps to get right. Get this one wrong and you end up with a nice modern artwork and not a functional PCB.

There are a few factors that I have found to impact this value:

1. The flatness of the base board. I.e. is it exactly level? Mine is not and has a difference of about 100 µm from one side of a 6-inch PCB to the other when placed in the centre of the Profiler. Small but important difference.
2. The quality of the copper board. The copper board I have has small waves in one direction. This makes for perfect lines in one direction and wavey lines in the other. On diagonal lines the tool sometimes gets pushed a little by the waves and results in narrowing of the tracks.
3. How well is the material fixed to the Profiler board? I use the double-sided tape method shown in the Elektor video which seems to work well.
4. There are probably others that I have yet to discover…

The manual procedure I use to set the *Z* home, given the factors above, is to position the machine head over the centre of the copper material and lowering the tool until it makes electrical contact with the surface. I use a multimeter on the continuity setting with one lead touching the copper surface and the other on the tool. When I am close to the surface I reduce the *Z* increments to 0.025 and listen for the beep. Once I hear the continuity beep I back the head off 0.100 to clear the surface. This is necessary to ensure the tool does not contact the copper surface when the drill is powered up or when it moves over the surface at this low level.

Alternate method of Z homing

There are two methods for adjusting the origin, based on either a dial gauge or a feeler gauge – the latter being suitable for initialization and calibration when changing tools, but not for checking in various places on the part to be machined. Not all Profiler users will have access to a dial gauge or equivalent instrument, and tools for amateurs (drills, milling cutters, etc.) are not usually length-calibrated. Here's a simpler method: a strip of thin paper placed on the table is trapped between the table and the tool by carefully lowering it by hand. The tool is then raised by about 0.1 mm, releasing the paper, and this is taken as the *Z*-axis origin.

Note: It is important you don't place any weight on the Profiler board or material when *Z* homing. Resting you hand on the board will impact the *Z* home value. It is also a good idea not to do this when the machine is operating.

Placing material

The base board may not be dead level so I place the material in the centre of the board to minimise any unevenness. Once the material is placed I position the drill head over the bottom left corner which will become the PCB origin.

The next step is to load the PCB design into ColiDrive with the drill head where you placed it. This ensures that the PCB design is placed correctly on the software 'virtual' Profiler board. There are other ways you can achieve this but this is the easiest for me.

Let's do it

Before you start, ensure you have (in order):

1. Set machine parameters.
2. Placed the material on the board.
3. Loaded your PCB design.

Then, to make it:

1. In the motor control panel, click the 'Make it' button.
2. Click the 'Start' button. The head will move to the tool change position and the 'Waiting to Continue' dialogue gives you the option to position the *Z* home. This option will initially be the default.
3. Insert the initial tool you need.
4. Click 'Continue' in the popup dialog.
5. Click 'OK'.
6. Manually drive the head into a good position for *Z* homing. I use the 'Go to Position' button and select a spot on the machine desktop window that is in the centre of my PCB design.
7. Perform the *Z* homing procedure outlined above.
8. Power up the drill and click the 'Finished zero setting' button in the 'Start Machining' dialogue and watch it go.

Noisy

If the phenomenon occurs even when stopped, this is a quite common problem with stepper motors driven from a PWM if the servo loop is unstable.

If the problem only occurs when the motor is running, and the sound frequency is the same as the motor's stepping frequency, you may also need to look at mechanical resonances. But in any event, the movements will never be silent – stepper motors 'sing' so long as their drive signals and/or the PWM frequency are within the audible range.

Jamming

Jamming may be caused by 'stiff spots' caused by lack of lubrication, out-of-true runners or a shaft, build-up of debris, dust and foreign materials on these elements, areas of insufficient mechanical play, poor alignment, or non-concentric coupling between motor and shaft.
The cause is often screws that have been overtightened before alignment, or distortion caused by over-tightening, as the components supplied are of industrial accuracy, and so significantly better than even careful manual workmanship makes it possible to achieve.

Axis-by-axis checking as you go is always best, and makes it easier to gain access to the settings.
It's invariably best to always try realignment first, virtually leaving the parts to take up their own positions without forcing them, and only then tightening screws after checking.
If these precautions prove fruitless, the simplest solution to solving a problem of eccentric coupling (and sometimes out-of-true shafts) is to make a 'flexible' coupling using a short piece of flexible tubing of suitable internal diameter (car hose, compressor air hose) and compressed air hose clips (less bulky than ordinary hose clips).

However it's unreasonable to expect the machine to achieve impossibly high performance either – Profiler is only meant to be a tool for 'informed amateurs'.

Tips and leads from experienced CNC users

The Ferm motor suggested in the article and supplied with the machine is not very robust and the spindle bearing risks wearing out very quickly. So you need to consider buying a proper milling spindle, like the ones on offer from **Kress** (www.kress-elektrik.de/en/index.php). But watch out, as the fixing diameter is 43 mm and doesn't fit the existing bracket. According to one user of this type of equipment, a 900-watt motor seems a bit marginal for machining aluminium.

As far as tools are concerned, you should use only tungsten-carbide bits, with a standard 3.2 mm shank (make sure you have suitable 'collets'). Milling and cutting-out may be performed using tungsten-carbide cutters up to 3 mm diameter, high-speed steel up to 8 mm if you have the right collet (in theory, supplied as standard). Epoxy PCB can be milled using tungsten-carbide cutters only. Engraving can be done using a 'spear' type cutter, 22° for plastic and 35° for aluminium (distributors: Welleman). Feed rates are dependent on the size of the stepper motors, and above all, their drive voltage. At a single feed rate of 5 mm/s engraving requires 3.9-amp stepper motors driven from at least 30 volts.

Board drilling is usually performed from 'Excellon' files generated by most CAD applications. PCB production by engraving the insulating paths between the track areas is of interest for prototyping, but you do need to find a suitable drawing program or else draw the insulation layout yourself – fairly easy with a little practice.

Any technical drawing program that allows exporting (or printing to a file in HPGL format) will allow you to design front panels and engrave text/images in 2D. Programs for creating PCB layouts need to permit the creation of the files for the track layout and the same files in Excellon format for the drilling.
For 3D use, the 'Ninos' software performs very well and is not expensive – but is sadly not compatible with Profiler. The same goes for Galaad, more expensive, but possibly configurable? Of course there is Deskproto with a 'Lite' version, which does less than the aforementioned ones despite being twice the price of Ninos, but is recommended by Colinbus themselves (and so is presumably compatible).

(070425-I)

Further information

Elektor forum: www.elektor.com/forum ,
go to the Profiler Milling Machine (January 2007) topic.

Reece Robinson's 'Profiler Operational Notes':
www.therobinsons.gen.nz/Profiler%20Lessons%20Learned.html

Green USB switch

Wolfram Winfera

According to the Energy Saving Trust, if you add up all the current drawn in standby mode by items such as stereos, TVs, VCRs and DVDs over a year in the UK alone, it amounts to 3.1 million tonnes of CO_2 released into the atmosphere. This is without factoring in the current drawn by all the PCs, laptops and their associated peripherals left in standby mode.

It is not necessary to spend a great deal of money or time to make a difference on a personal level. The circuit described here is designed for use by laptop or notebook computers. It will automatically switch off all mains powered peripheral equipment including monitor, printer, scanner, TV tuner and USB hub etc when it detects that the notebook is switched off. The circuit is quite straightforward; in addition to an optocoupler it requires a 12 V double-pole relay with mains rated contacts and a small power supply for the optocoupler. When the laptop is switched on 5 V appears at the USB socket, activating the relay and switching through the mains supply on K3 and K4. The notebook's USB socket is still available to be used as normal but it's worth remembering that the optocoupler takes a few milliamps from the USB supply and this may cause a problem if a high-current device is plugged into the USB socket. In the case where the laptop has more than enough USB sockets it may be worthwhile using one of them solely for this circuit, the extension USB connector K2 would then not be required.

The circuit is mounted into a mains plug enclosure which provides a socket where the mains extension strip will be plugged into. With any luck there will be sufficient space to fit the entire circuit into the mains extension strip enclosure and save the need for a separate enclosure. The slow-blow 6.3-A fuse (F1) protects the equipment plugged into the strip.

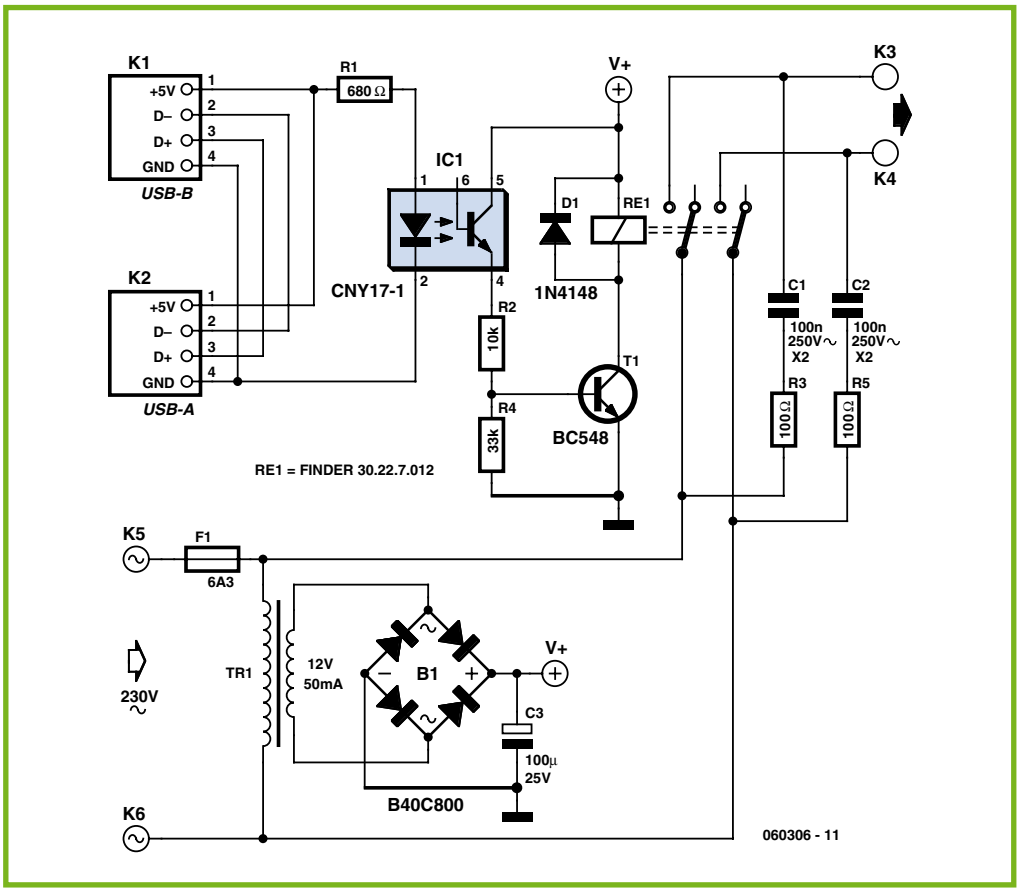

In addition to the optocoupler and relay the circuit also has a 'freewheel' diode D1 and a relay driver formed by T1 and its base bias voltage divider network R2/R4. The two 'snubber' networks C1/R3 and C2/R5 reduce the possibility of arcing which can occur when the relay contacts open (especially with inductive loads). Capacitors C1 and C2 **must** be class X2 types which can handle mains voltage plus any spikes. The power supply consists of a small mains transformer (12 V, 50 mA), bridge rectifier and smoothing capacitor C3.

The laptop's mains adaptor itself can also be switched by this circuit when the laptop is fitted with its rechargeable battery which allows the computer to boot up without a mains supply. The entire USB switch circuit draws current even when it is off but this value is tiny compared to the combined standby current of all the peripherals.

Note that parts of this circuit are connected to the (potentially lethal) mains supply voltage; **it is essential** to provide protection to ensure that nothing can accidentally make contact with these parts of the circuit. It is also important to observe correct separation between parts of the circuit carrying low voltage and those carrying the high voltage. Please observe the electrical Electrical Safety guidelines which are reprinted in *Elektor Electronics* several times a year.

The circuit is less suitable for use with desktop PCs because the majority of these machines supply 5 V over the USB socket even though they have been shut down via software. The only way to turn off in this case is to reach around the back of the machine and switch off at the main switch.

(060306-I)

Advertisement

Hexadoku

Puzzle with an electronic touch

Phew, have you fully recovered from that horrid Alphanumski puzzle from the Summer Circuits edition? Good, as this month it's back to a more leisurely pace with a regular Hexadoku waiting to be solved. The prizes are well worth your effort: an E-blocks Starter Kit Professional and three Elektor SHOP vouchers.

The instructions for this puzzle are straightforward. In the diagram composed of 16 x 16 boxes, enter numbers such that **all** hexadecimal numbers 0 through F (that's 0-9 and A-F) occur once only in each row, once in each column and in each of the 4x4 boxes (marked by the thicker black lines). A number of clues are given in the puzzle and these determine the start situation. All correct entries received for each month's puzzle go into a draw for a main prize and three lesser prizes. All you need to do is send us the numbers in the grey boxes.

The puzzle is also available as a **free download** from our website

Participate!

Please send your solution (the numbers in the grey boxes) by email to:
editor@elektor.com
Subject: hexadoku 09-2007.

Alternatively, by fax or post to:
Elektor Electronics Hexadoku
Regus Brentford
1000 Great West Road
Brentford TW8 9HH
United Kingdom.
Fax (+44) 208 2614447

The closing date is
1 October 2007.

The competition is not open to employees of Segment b.v., its business partners and/or associated publishing houses.

Prize winners

The solution of the April 2007 Hexadoku is: **1B456**.

The **E-blocks Starter Kit Professional** goes to:

Michael Murphy (IRL).

An **Elektor SHOP voucher worth £35.00** goes to:

Knud Dahl Christensen (DK), John Stevens (UK), and Tony Jacques (UK).

Congratulations everybody!

	0		3				5		A	E		1	2	D	F
	1		2			D	7			4	9				
7		A	E		0			6		D				4	
8				1	C					2			3		E
5	7	C		A	6				F			4		E	8
		2				0		E	C						
	D		1	F	9	2		A		6	8				
A						E	4	D			5	F	9	C	
	9			6		8					B	C		5	0
		4	D		E					5	F				7
3	E	5		C	7	F		4	0			2	B		
		0	8				1	2				D			3
		B	A		D	7					6	E	F		4
	5						6	8	E					3	B
F	6	E	C						2	0	4	7	5		D
4		8	9	5							D		A		1

(c) PZZL.com

Solve Hexadoku and win!

Correct solutions received enter a prize draw for an

E-blocks Starter Kit Professional

worth **£248.55**

and three **Elektor Electronics SHOP Vouchers** worth £35.00 each.

We believe these prizes should encourage all our readers to participate!

Philips '60'-series NORbits (1968)

Arthur Pistorius

It must have been 1980 when a Philips employee handed me a plastic bag filled with bulky, black, red and blue "ICs" and the message: "see if these are any use to you". The lot came with a manual that unfortunately had to be returned to the library. To a budding electronics enthusiast, this was a once in a lifetime opportunity to get started with digital electronics. The Internet has little information on these parts. However, Elektor's *Retronics* page is a fine place to reproduce some user experience with a number of components from this series.

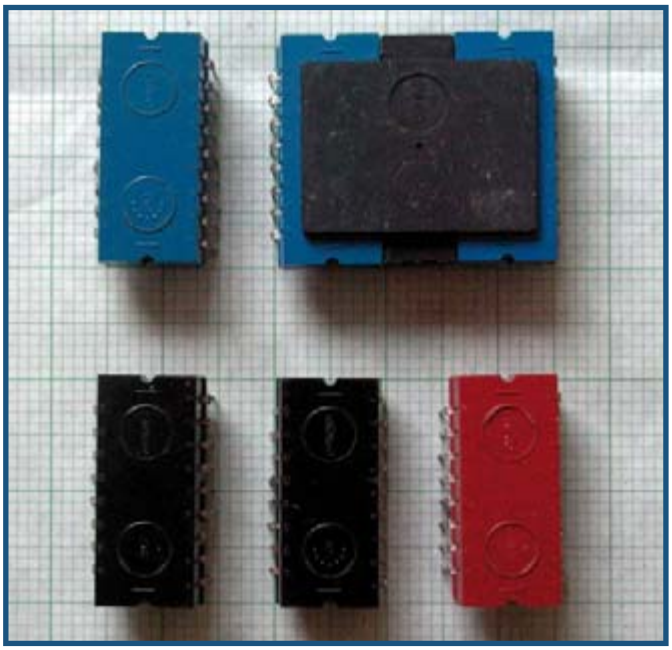

As it turned out I had been given one of the earliest forms of integrated digital circuits housed in large (1 by 2 inch), 17-pin DIL cases, developed by Philips in the 1960s. Inside the modules is a small PCB containing some transistors and resistors. The documentation confirms that these building blocks belong to the RTL family of logic circuits. The black cases contain two or four NOR gates (2.NOR60 or 4.NOR60) and may be considered the basic 'bricks'. In RTL technology, NOR gates can be made from a single transistor and two or more base resistors, or by paralleling multiple transistors, each with its own base resistor. NORbits were produced using the first principle, with the inherent disadvantage of limiting the drive units (DU) of successive gates. The transistors, by the way, are npn types.

The modules were specified for either a 12 V or a 24 V supply. The red cases (TU60) contain a monostable multivibrator and might be described as a precursor of the legendary 555. Two types of amplifier are available to drive other circuits like small motors or relays: the 2.IA60, a blue module containing two inverting amplifiers; and the PA60, a single power amp in a dual blue case with a heatsink, capable of supplying up to 1 amp or so. The documentation also mentions a green case containing a few input filters (2.SF60) for use in combination with sensors like reed contacts (IVSR; iron vane switched reed). The component was not available however.
The collection also include a number of 'chassis' having fast-on connectors at the top side. The type UMC60 (Universal Mounting Chassis) has room for six standard enclosures. Electrical connections between the long connecting pins could be made using wire wrapping but plain soldering also worked fine.
The 60-series NORbits were typically used in machine control systems, suggesting an analogy with more contemporary PLCs.

In my attic, an experimental system was available in the form of a model train 'doing the rounds' on a track. Commercial model train controls were (and still are) expensive, so the first circuits were designed for railway crossings with light signals, and to make a train wait for a predetermined period in a station. These days the same train is controlled by EEDTs on a much larger track layout. However, for old time's sake, an automatic shuttle built from NORbits still operates on a side track, electrically separated from the main system, with train detection implemented using reed contacts. The wait times at the end stations are generated using TU60s with a standard flip-flip added for the train reversal. The high supply voltage makes the system immune to noise. The photo puts the size of the circuit (without the PWM speed control) in a wholly new perspective. One carriage almost disappears behind it! It's corny but a lot has changed in 40 years…

(075079-I)

Reference

Control system design manual for 60-series NORbits (1968), Philips. 240 pages.
ISBN 9399 263 016 01.

Retronics is a monthly column covering vintage electronics including legendary Elektor designs. Contributions, suggestions and requests are welcomed; please send an email to editor@elektor-electronics.co.uk, subject: Retronics EE.

ELEKTOR SHOWCASE

To book your showcase space contact Huson International Media

Tel. 0044 (0) 1932 564999 Fax 0044 (0) 1932 564998

ATC SEMITEC LTD

www.atcsemitec.co.uk

Thermal and current-sensitive components for temperature control and circuit protection;

- NTC Thermistors
- Current Diodes
- Thermostats
- Re-settable Fuses
- Thermal Fuses
- Temperature Sensors

Call today for free samples and pricing

Tel: 01606 871680 Fax: 01606 872938

AVIT RESEARCH

www.avitresearch.co.uk

USB has never been so simple...
with our USB to Microcontroller Interface cable. Appears just like a serial port to both PC and Microcontroller, for really easy USB connection to your projects, or replacement of existing RS232 interfaces.

See our webpage for more details. From £15.00.

BETA LAYOUT

www.pcb-pool.com

Beta layout Ltd Award-winning site in both English and German offers prototype PCBs at a fraction of the cost of the usual manufacturer's prices.

BYVAC ELECTRONICS

www.byvac.co.uk

32Bit ARM Microcontroller, USB, built in RTC with itís own operating system, no complex tools, just a terminal emulator, start writing programs in 20 minutes. Complete with CD-ROM, Software and 100 Page Foundation book

DECIBIT CO.LTD.

www.decibit.com

Smallest 2.4 GHz ISM band MCU embedded transceiver modules. Complete tiny solution, ready to transmit RF data by only attaching as example a CR2032 coin cell to it.

EasyDAQ

www.easydaq.biz

We design & supply low cost USB/RS232 based data acquisition, automation & control products:

- USB connected & powered, 8 opto isolated voltage inputs chans, 4DIO & 4 onboard relays capable of switching 240V@10A. With Labview, VC & VB examples - £60

EASYSYNC

http://www.easysync.co.uk

EasySync Ltd sells a wide range of single and multi-port USB to RS232/RS422 and RS485 converters at competitive prices.

ELNEC

www.elnec.com

- device programmer manufacturer
- selling through contracted distributors all over the world
- universal and dedicated device programmers
- excellent support and after sale support
- free SW updates
- reliable HW
- once a months new SW release
- three years warranty for most programmers

FIRST TECHNOLOGY TRANSFER LTD.

http://www.ftt.co.uk/PICProTrng.html

Microchip Professional C and Assembly Programming Courses. The future is embedded.

First Technology Transfer Ltd.

Microchip Consultant / Training Partner developed courses:

- Distance learning / instructor led
- Assembly / C-Programming of PIC16, PIC18, PIC24, dsPIC microcontrollers
- Foundation / Intermediate

FLEXIPANEL LTD

www.flexipanel.com

TEAclippers - the smallest PIC programmers in the world, from £20 each:

- Per-copy firmware sales
- Firmware programming & archiving
- In-the-field firmware updates
- Protection from design theft by subcontractors

FUTURE TECHNOLOGY DEVICES

http://www.ftdichip.com

FTDI designs and sells USB-UART and USB-FIFO interface i.c.'s.
Complete with PC drivers, these devices simplify the task of designing or upgrading peripherals to USB

FUTURLEC

http://www.futurlec.com

Save up to 60% on

- Electronic Components
- Microcontrollers, PIC, Atmel
- Development Boards, Programmers

Huge range of products available on-line for immediate delivery, at very competitive prices.

LONDON ELECTRONICS COLLEGE

http://www.lec.org.uk

Vocational training and education for national qualifications in Electronics Engineering and Information Technology (BTEC First National, Higher National NVQs, GCSEs and Advanced Qualifications). Also Technical Management and Languages.

MARCHAND ELECTRONICS INC.

www.marchandelec.com

- power amplifier modules
- electronic crossovers solid state / valve / passive
- valve amplifiers
- phono preamps
- handheld sinewave generator
- kits or assembled
- software electronic instruments
- custom design services

MODular ElecTRONics

www.modetron.com

- Plug and Program
- FREE application s/w
- Hobbyist ease-of-use
- Professional finish with enclosure and LEXAN faceplate
- We will design and brand your custom application
- Growing range of PSU's, i/o modules, displays and microcontrollers

products and services directory

MQP ELECTRONICS

www.mqp.com

- Low cost USB Bus Analysers
- High, Full or Low speed captures
- Graphical analysis and filtering
- Automatic speed detection
- Bus powered from high speed PC
- Capture buttons and feature connector
- Optional analysis classes

NEW WAVE CONCEPTS

www.new-wave-concepts.com

Software for Hobbyists:

- Livewire - circuit simulation software, only £34.99
- PCB Wizard - PCB design software, only £34.99
- Circuit Wizard - circuit, PCB and breadboard design software, only £59.99

Available from all Maplin Electronics stores and www.maplin.co.uk

ROBOT ELECTRONICS

http://www.robot-electronics.co.uk

Advanced Sensors and Electronics for Robotics

- Ultrasonic Range Finders
- Compass modules
- Infra-Red Thermal sensors
- Motor Controllers
- Vision Systems
- Wireless Telemetry Links
- Embedded Controllers

SOURCEBOOST TECHNOLOGIES

http://www.sourceboost.com

Next generation C compiler and development products at highly affordable prices:

- C, C++, and Basic compilers for PIC12, PIC16, PIC18
- Modern IDE, with PIC simulator, source level debugger and virtual devices.
- RTOS for PICmicro.
- PIC based controller and Development boards.
- Download and try for Free from http://www.sourceboost.com

COMPONENTBIN.COM

www.componentbin.com

Kickstart your development with modules and parts from componentbin.com

- ARM7 modules
- Ethernet modules
- Superb Graphic LCD displays (all with example software)

and much much more...

Online ordering and great prices!

ULTRALEDS

Ultraleds.co.uk

http://www.ultraleds.co.uk

tel: 0871 7110413 / 01625 576778

Large range of low cost Ultra bright leds and Led related lighting products. Major credit cards taken online with same day depatch.

USB INSTRUMENTS

http://www.usb-instruments.com

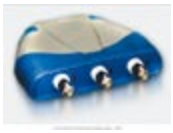

USB Instruments specialises in PC based instrumentation products and software such as Oscilloscopes, Data Loggers, Logic Analysers which interface to your PC via USB.

VIRTINS TECHNOLOGY

www.virtins.com

PC and Pocket PC based virtual instrument such as sound card real time oscilloscope, spectrum analyzer, signal generator, multimeter, sound meter, distortion analyzer, LCR meter. Free to download and try.

www.elektor.com

SHOWCASE YOUR COMPANY HERE

Elektor Electronics has a feature to help customers promote their business, Showcase - a permanent feature of the magazine where you will be able to showcase your products and services.

- For just £220 + VAT (£20 per issue for eleven issues) Elektor will publish your company name, website address and a 30-word description
- For £330 + VAT for the year (£30 per issue for eleven issues) we will publish the above plus run a 3cm deep full colour image - e.g. a product shot, a screen shot from your site, a company logo - your choice

Places are limited and spaces will go on a strictly first come, first served basis. So-please fax back your order today!

I wish to promote my company, please book my space:

• Text insertion only for £220 + VAT • Text and photo for £330 + VAT

NAME: ..... ORGANISATION: .....

JOB TITLE: .....

ADDRESS: .....

.....

..... TEL: .....

PLEASE COMPLETE COUPON BELOW AND FAX BACK TO 00-44-(0)1932 564998

COMPANY NAME .....

WEB ADDRESS .....

30-WORD DESCRIPTION .....

.....

.....

.....

.....

Automating the R8C Starter Kit

Ludwig Libertin

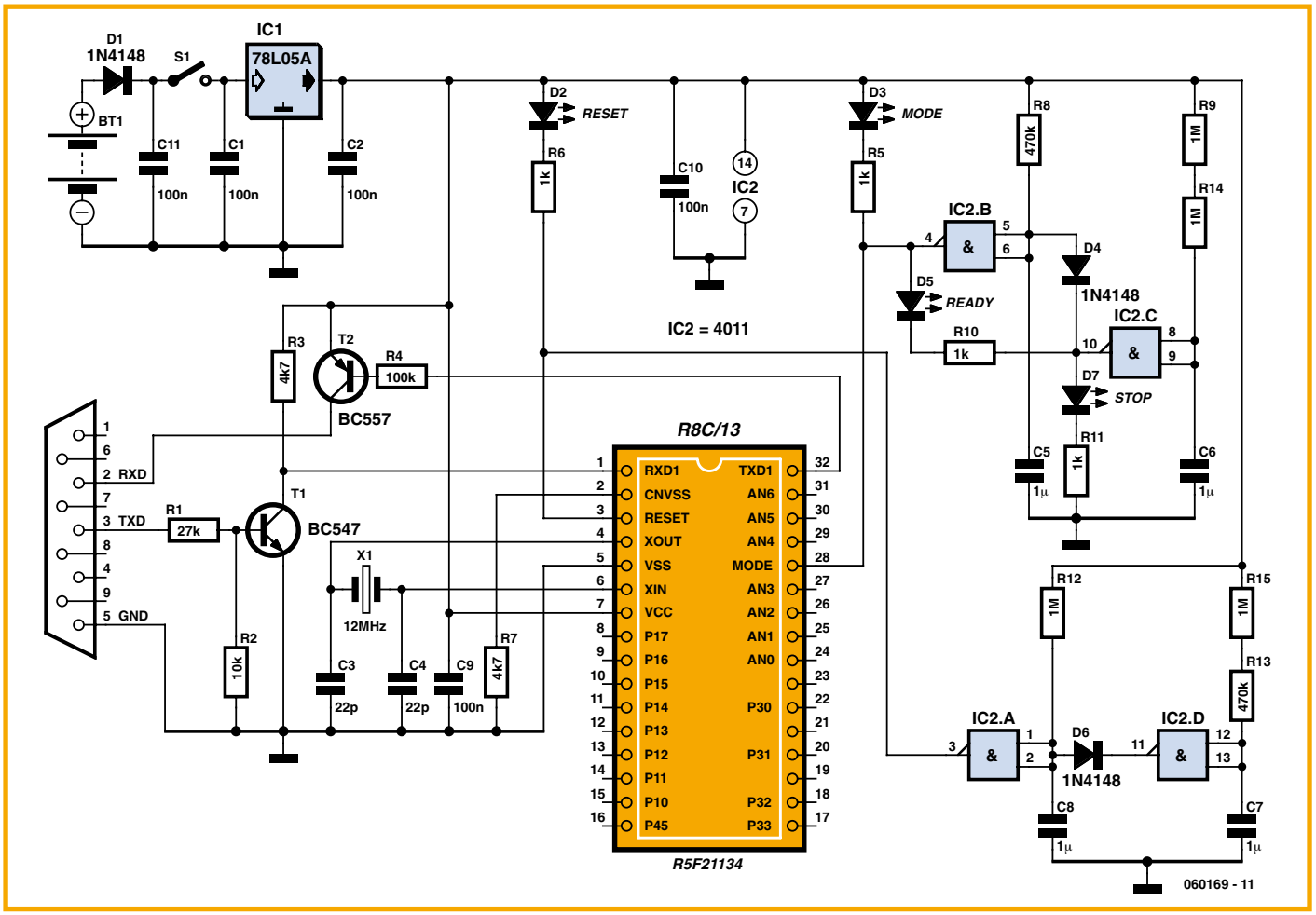

We described the £10 'Tom Thumb' R8C microcontroller starter kit in the February 2006 issue of *Elektor Electronics*. A disadvantage of this minimal system, in the author's opinion, is that the programming procedure entails considerable manual intervention: 'press Reset', 'press Mode', 'release Reset', 'release Mode' and so on, involving both the PC and the microcontroller. It might also be possible for contact bounce to cause a button press to be registered several times: reason enough for the author to automate the process by souping up the system with a couple of extra components.

A low-cost CMOS quad NAND IC, type 4011, is used. The gates are configured to produce delays using RC networks. When power is applied the outputs of all the gates will be high and so the 'Stop' LED D7, connected to the output of IC2.C, lights. Approximately half a second later the output of IC2.B goes low and the 'Mode' LED D3 lights: this corresponds to the imaginary pressing of the 'Mode' button. Another half second later the output of IC2.A also goes low, lighting the 'Reset' LED D2 to indicate that an imaginary 'Reset' button has been pressed.

Another half second passes and then the output of IC2.D goes low. This pulls down the input to IC2.A, extinguishing the 'Reset' LED. This corresponds to releasing the Reset button.

Finally, a further half second later, the output of IC2.C goes low, extinguishing the 'Stop' LED. The inputs to IC2.B are pulled low via D4, and so the 'Mode' LED also goes out; the 'Ready' LED D5 also lights. The 'Mode' button has in effect been released and we are ready to go.

When the 'Ready' LED lights the Flash programming process can be started from the connected PC. When programming is complete power to the circuit can be switched off and the microcontroller removed.

To simplify things further the author has designed a small printed circuit board for the R8C microcontroller with a form factor compatible with a 32-pin DIL IC. If the circuit described here is built using a commercially-available zero insertion force socket, reprogramming and testing are made much easier.

(060169-I)

elektor SHOP

Order now using the Order Form in the Readers Services section in this issue.

Elektor Electronics (Publishing)
Regus Brentford
1000 Great West Road
Brentford TW8 9HH
United Kingdom

Telephone +44 208 261 4509
Fax +44 208 261 4447
Email: sales@elektor-electronics.co.uk

More information on www.elektor-electronics.co.uk

CD-ROM BESTSELLERS

1 Ethernet Toolbox

This CD-ROM contains all essential information regarding Ethernet interfaces! To help you learn about the Ethernet interfaces, we have compiled a collection of all articles on this topic that have appeared in Elektor Electronics and complemented them with additional documentation and links to introductory articles on Ethernet interfaces. It includes a collection of data sheets for dedicated Ethernet interface ICs from many different manufacturers. The CD-ROM provides a wealth of information about connectors and components for the physical layer (PHY) and specific software tools for use with the Ethernet (Software).

ISBN 978-90-5381-214-3 | **£18.90 (US$ 37.90)**

2 Elektor 2006

This CD-ROM contains all editorial articles published in Elektor Electronics Volume 2006. Using the supplied Acrobat Reader program, articles are presented in the same layout as originally found in the magazine. All free, printed, supplements our readers got last year, like the Visual Basic, C and i-TRIXX booklets are also contained on the CD. The Elektor Volume 2006 CD-ROM has a rather different look and feel than previous editions. It's gone through a makeover in more than one way!

ISBN 978-90-5381-207-5 | **£16.90 (US$ 33.80)**

3 Home Automation

This CD-ROM provides an overview of what manufacturers offer today in the field of Home Networking, both wired and wireless. The CD-ROM contains specifications, standards and protocols of commercially available bus and network systems. For developers, there are datasheets of specific components and various items with application data. End-users and hobbyists will find ready-made applications that can be used immediately.

ISBN 978-90-5381-195-5 | **£13.90 (US$ 27.80)**

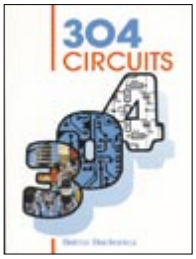

304 Circuits
ISBN 978-0-905705-34-7
366 pages
£13.45 (US$ 27.00)

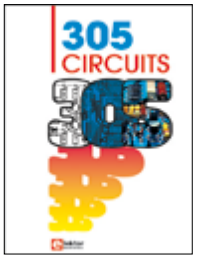

305 Circuits
ISBN 978-0-905705-36-1
369 pages
£15.55 (US$ 31.00)

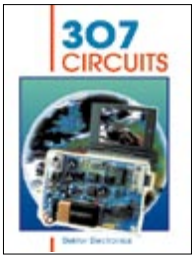

307 Circuits
ISBN 978-0-905705-62-0
342 pages
£18.20 (US$ 37.00)

Complete your 30x circuits series now!

The 30x series of Summer Circuit compilation books have been best-sellers for many years. You can use these books not only for building the circuits described, but also as a treasure trove of ideas or circuit adaptions for your own experiments. Many readers have found in these books that new approach, new concept, or new circuit they were looking for.

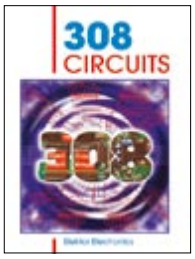

308 Circuits
ISBN 978-0-905705-66-8
367 pages
£19.25 (US$ 38.50)

309 Circuits
ISBN 978-0-905705-69-9
432 pages
£19.95 (US$ 39.95)

BESTSELLING BOOKS Top-5

1. **309 Circuits**
   ISBN 978-0-905705-69-9 **£19.95 (US$ 39.95)**
2. **Visual Basic for Electronics Engineering Applications**
   ISBN 978-0-905705-68-2 **£29.00 (US$ 58.00)**
3. **Microcontroller Basics**
   ISBN 978-0-905705-67-5 **£19.50 (US$ 39.00)**
4. **PC-Interfaces under Windows**
   ISBN 978-0-905705-65-1 **£27.25 (US$ 54.50)**
5. **Modern High-end Valve Amplifiers**
   ISBN 978-0-905705-63-7 **£27.25 (US$ 54.50)**

More bestsellers on www.elektor-electronics.co.uk

elektor SHOP

Order o
www.elektor-el

Order now using the Order Form in the Readers Services section in this issue.

Digital Inspector
(September 2007)

Kit, incl. PCB, controller, display, case and all parts

060092-71

£ 77.60 / US$ 155.20

Software Defined Radio
(May 2007)

Ready-populated and tested board

070039-91

£ 72.45 / US$ 126.50

Stand-Alone OBD2 Analyser
(June 2007)

Kit of parts, incl. case, cable, front panel foil and mounting materials

070038-72

£ 51.70 / US$ 97.50

Speedmaster
(May 2007)

The circuit voted winner of the R8C Design Competition!

Ready-populated and tested board (excl. R8C module)

070021-91

£ 51.70 / US$ 97.45

No. 369 SEPTEMBER 2007

		£	$
Tilt Gamepad			
070233-41	Programmed controller ATMega8-16PI	6.20	12.35
070233-81	Software on CD-ROM	5.20	10.40
070233-91	Printed circuit board with sensor fitted	18.90	37.80
Digital Inspector			
060092-1	Printed circuit board	www.thepcbshop.com	
060092-41	Programmed controller PIC18F4580-I/P	13.10	26.20
060092-71	Kit of parts PCB, controller, case and all parts	77.60	155.20
060092-81	Software on CD-ROM	5.20	10.40

No. 367/368 JULY/AUGUST 2007

Dual Battery			
070343-1	PCB, bare	5.20	9.75
Fast Charger for NiMH Batteries			
070213-1	PCB, bare	www.thepcbshop.com	
Lithium Charger			
070273-1	PCB, bare	8.90	12.95
Low2 Cost USB Demo Board			
060342-81	CD-ROM, project software	5.20	9.75
060342-41	PIC18F4550, programmed	15.15	28.50
LPC 900 Programmer			
070084-1	PCB, bare	6.90	12.95
MotoBox			
070129-1	PCB, bare	www.thepcbshop.com	
070129-41	PIC16F628-04/P, programmed	14.80	27.95
Propeller Prototyping Board for BoeBot			
070275-1	PCB, bare	11.00	20.75
Satnav for Robots			
070350-81	CD-ROM, project software	5.20	9.75
070350-41	ATmega32, programmed	16.50	31.15
Serial Interface for the Propeller			
070276-1	PCB, bare	www.thepcbshop.com	
Stereo Robot Ears			
060040-1	PCB, bare	www.thepcbshop.com	
060040-81	CD-ROM, project software	5.20	9.75
060040-41	PIC16F88, programmed	10.00	18.85

No. 366 JUNE 2007

2.4 GHz WiFi Spectrum Analyser			
070040-1	PCB, bare	8.25	15.50
070040-11	CD-ROM, Linux & Windows software	5.20	9.75
Coil Clinic			
060195-1	PCB, bare	7.60	14.25
060195-11	CD-ROM, project software	5.20	9.75
060195-41	Atmega48-20PU, programmed	5.20	9.75
Linux Oscilloscope			
060241-11	CD-ROM, project software	5.20	9.75
060241-W	Program listing	free download	
Stand-Alone OBD2 Analyser			
070038-72	Kit of parts, incl. case, cable, front panel foil and mounting materials	51.70	97.50
070038-21	Online simulator examples	free download	
070038-W1	Manual	free download	
Whistles from on high			
060044-1	PCBs, bare; set for TX and RX	12.00	22.75
060044-11	CD-ROM, project software	5.20	9.75
060044-41	ATtiny15PC, programmed	10.00	18.75

No. 365 MAY 2007

Software Defined Radio			
070039-91	Ready-populated and tested board	72.45	126.50
070039-11	CD-ROM, project software	5.20	9.75
Thank your for Flying USB FliteSim			
060378-1	PCB, bare	www.thepcbshop.com	
060378-41	PIC18F2550I/SP, programmed	15.50	29.25
Universal JTAG Adaptor			
060287-1	PCB, bare, with programmed microcontroller	11.00	20.75
060287-41	EP900LC only, programmed	P&P only	P&P only
Magnetometer			
050276-1	PCB, bare	www.thepcbshop.com	
Speedmaster			
070021-91	Ready-populated and tested board (excl. R8C module)	51.70	97.45
Seismograph			
060307-1	PCB, bare	www.thepcbshop.com	
060307-11	CD-ROM, project software	5.20	9.75
060307-41	ATTiny45,programmed	10.35	19.50

nline at ectronics.co.uk

Due to practical constraints, final illustrations and specifications may differ from published designs. Prices subject to change. See www.elektor-electronics.co.uk for up to date information.

Elektor Electronics
Regus Brentford
1000 Great West Road
Brentford TW8 9HH
United Kingdom
Tel.: +44 (0) 208 261 4509
Fax: +44 (0) 208 261 4447
Email: sales@elektor-electronics.co.uk

Wireless USB in miniature
(March 2007)

iDwarf -168 Transmitter module (built & tested)
050402-91
£ 25.40 / US$ 50.80

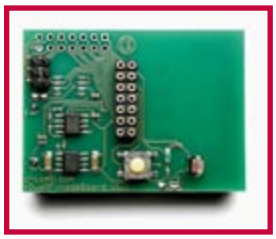

iDwarf Node Board (built & tested)
050402-91
£ 18.10 / US$ 36.20

iDwarf Hub Board (built & tested)
050402-93
£ 18.10 / US$ 36.20

Kits & Modules

g-Force on LEDs
(April 2007)

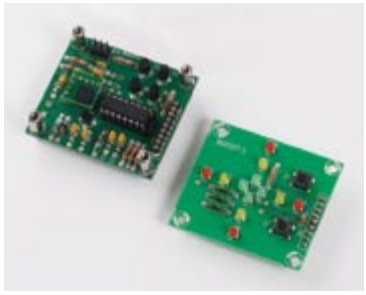

PCB set, bare, incl. 2 MMA7260 sensors, BDM cable parts

060297-71
£ 10.50 / US$ 21.00

USB Stick with ARM and RS232
(November 2006)

Assembled and tested board

060006-91
£ 79.90 / $ 149.95

ATtiny as RDS Signal Generator

		£	$
060253-41	Attiny2313-20, programmed	4.20	7.80

No. 364 APRIL 2007

Battery Charge-n-Check

050073-1	PCB, bare, main board	10.30	19.50
050073-2	PCB, bare, display board	10.30	19.50
050073-11	CD-ROM, project software	5.20	9.75
050073-41	ST7FMC2S4, programmed	16.90	31.85

g-Force on LEDs

060297-71	PCB set, incl. 2 MMA7260 sensors, BDM cable parts	10.50	21.00
060297-11	CD-ROM, project software	5.20	9.75

Programmer for Freescale 68HC(9)08

060263-1	PCB, bare	www.thepcbshop.com

A Simple Mains Inverter

060171-1	PCB, bare	www.thepcbshop.com

Very Simple Clock

060350-1	PCB, bare	www.thepcbshop.com

E-blocks Light Chaser Squared

075032-1	PCB, bare	www.thepcbshop.com

No. 363 MARCH 2007

AVR drives USB

060276-1	PCB, bare	10.60	21.20
060276-11	CD-ROM, project software incl. source code	5.20	9.75
060276-41	ATmega32-16PC, programmed	9.50	19.00

Wireless USB in Miniature

050402-1	PCB, bare, iDwarf prototyping board	8.70	17.40
050402-91	iDwarf -168 Transmitter module (built & tested)	25.40	50.80
050402-92	iDwarf Node Board (built & tested)	18.10	36.20
050402-93	iDwarf Hub Board (built & tested)	18.10	36.20

Mobile Phone LCD for PC

060184-1	PCB, bare	www.thepcbshop.com	
060184-11	CD-ROM, project software	5.20	9.75
060184-41	ATmega16-16PC, programmed	8.95	16.85

Scale Deposit Fighter

070001-1	PCB, bare	www.thepcbshop.com

No. 362 FEBRUARY 2007

		£	$

... 3, 2, 1 Takeoff!

050238-1	Transmitter PCB, bare	www.thepcbshop.com
050238-2	Receiver PCB, bare	www.thepcbshop.com

MP3 Preamp

060237-1	PCB, bare	www.thepcbshop.com

A Telling Way of Telling the Time

050311-1	PCB, bare	www.thepcbshop.com	
050311-31	CPLD, programmed	35.50	66.95

FPGA Course (9)

060025-9-11	CD-ROM, course software incl. source code	5.20	9.75

Explorer-16 Value Pack

060280-91	Four components packaged together in a single box	127.60	255.20

No. 361 JANUARY 2007

Sputnik Time Machine

050018-1	PCB	www.thepcbshop.com	
050018-11	CD-ROM, project software (incl. source code)	5.20	9.75
050018-41	AT89C2051, programmed	3.60	7.20

Very Simple Clock

060350-1	PCB	www.thepcbshop.com	
060350-11	CD-ROM, project software (incl. source code)	5.20	9.75
060350-41	PIC16F628-20, programmed	5.80	11.60

FPGA Course (8)

060025-8-1	Software (incl. source code)	5.20	9.75

No. 360 DECEMBER 2006

Shortwave Capture

030417-1	PCB, bare (receiver board)	www.thepcbshop.com
030417-2	PCB, bare (control & display boards)	www.thepcbshop.com
030417-41	AT90S8515-8PC, programmed	12.10	24.20

Products for older projects (if available) may be found on our website www.elektor-electronics.co.uk

home construction = fun and added value

GPS Tracking Aid

It's a reality to owners of expensive BMW and Mercedes cars, and a dream to the rest of us poor souls: to know the exact whereabouts of the prize vehicle when you're not driving it! The dream now comes true: send your 'wheels' an SMS message prompting it to text back its whereabouts on the globe by means of GPS coordinates! The Elektor GPS Tracking Aid is based on a Wavecom modem handling the GSM/SMS comms, and a Trimble Copernicus module for the GPS satellite reception. All you have to do is program the board using your PC and then install it in your car in tamperproof fashion. That's right, no soldering — the unit comes ready-assembled through the Elektor SHOP! (we're sorry this article could not be included in the September 2007 issue as planned)

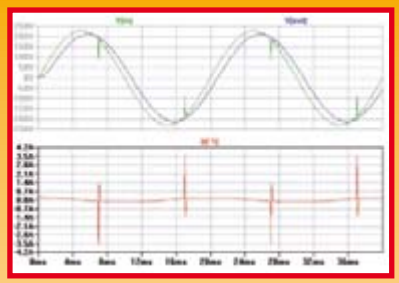

Clean Audio Power

No audio equipment achieves optimum sonic performance if it isn't powered from a clean supply voltage. In the PSU, due attention should be paid not just to its current capacity (specially for audio power amps), but also to the degree it's capable of suppressing mains-borne noise, horrid spikes and other interference (common-mode or not) mainly from dimmers, cheapo power tools and power line signalling devices. This article delves deep into the theoretical and practical aspects of what should be essentially included in any PSU for audio equipment: a noise suppressor with a properly designed filter response to eradicate all that noise polluting the mains and interfering with the audio signal. Apart from presenting 'must-know' information for audio purists, the article also goes practical by explaining how to design and build such a filter, as well as adapt it to your personal requirements.

Hybrid Audio Power Amplifier

This project combines valve and transistor technology in one design of an audio amplifier that's easily reproducible as well as inexpensive. Output power is rated at 100 watts from transistors type 2SC5200 in a quasi-complementary configuration, while ECC83 (12AX7) and ECC88 valves in the prestage and driver stages add not just a nostalgic look & feel to the amplifier, but also what many call the 'warm sound from valves'.

RESERVE YOUR COPY NOW!

UK mainland subscribers will receive the magazine between 22 and 25 September 2007.

The October 2007 issue goes on sale on Thursday 27 September 2007 (UK distribution only).

Article titles and magazine contents subject to change, please check www.elektorcom.

NEWSAGENTS ORDER FORM

SHOP SAVE / HOME DELIVERY

Please save / deliver one copy of *Elektor Electronics* magazine for me each month

Name: . . . . . .

Address: . . . . . .

Post code: . . . . . .

Telephone: . . . . . .

Date: . . . . . .

Signature: . . . . . .

elektor electronics
leading the way

Please cut out or photocopy this form, complete details and hand to your newsagent.
Elektor Electronics is published on the third Thursday of each month, except in July.
Distribution S.O.R. by Seymour (NS).

w.elektor.com www.elektor.com www.elektor.com www.elektor.com www.elektor.

Elektor Electronics on the web

All magazine articles back to volume 2000 are available online in pdf format. The article summary and parts list (if applicable) can be instantly viewed to help you positively identify an article. Article related items are also shown, including software downloads, circuit boards, programmed ICs and corrections and updates if applicable. Complete magazine issues may also be downloaded.

In the Elektor Electronics Shop you'll find all other products sold by the publishers, like CD-ROMs, kits and books. A powerful search function allows you to search for items and references across the entire website.

Also on the Elektor Electronics website:

- Electronics news and Elektor announcements
- Readers Forum
- PCB, software and e-magazine downloads
- Surveys and polls
- FAQ, Author Guidelines and Contact

Order Form 09-2007

Description		Price each	Qty.	Total	Order Code
309 Circuits	NEW	£ 19.95			
Formula Flowcode Buggy	NEW	£ 85.00			
CD-ROM Ethernet Toolbox	NEW	£ 18.90			
CD-ROM Elektor 2006		£ 16.90			
Visual Basic for Electronics Engineering Applications		£ 29.00			
		Sub-total			
		P&P			
		Total paid			

Prices and item descriptions subject to change.
The publishers reserve the right to change prices without prior notification. Prices and item descriptions shown here supersede those in previous issues. E. & O.E.

METHOD OF PAYMENT
(see reverse before ticking as appropriate)

- ☐ **Bank transfer**
- ☐ **Cheque**
  (UK-resident customers ONLY)
- ☐ **Giro transfer**
- ☐ VISA / EUROCARD MasterCard

Expiry date: _____

Verification code: _____

Name

Address + Post code

Tel. *Email*

Date – – 2007 *Signature*

EL09

Please send this order form to*
(see reverse for conditions)

Elektor Electronics (Publishing)
Regus Brentford
1000 Great West Road
Brentford TW8 9HH
United Kingdom

Tel.: +44 208 261 4509
Fax: +44 208 261 4447
www.elektor-electronics.co.uk.
sales@elektor-electronics.co.uk

*USA and Canada residents may (but are not obliged to) use $ prices, and send the order form to:
Old Colony Sound Lab
P.O. Box 876, Peterborough
NH 03458-0876. Tel. (603) 924-6371, 924-6526,
Fax: (603) 924-9467
Email: custserv@audioXpress.com

Order Form 09-2007 Subscription

Yes, I am taking out an annual subscription to Elektor Electronics and receive a free 1GB MP3 player.

I would like:

- ☐ **Standard Subscription (11 issues)**
- ☐ **Subscription-Plus**
  (11 issues plus the Elektor Volume 2007 CD-ROM)

* *Offer available to Subscribers who have not held a subscription to Elektor Electronics during the last 12 months. Offer subject to availability. See reverse for rates and conditions.*

METHOD OF PAYMENT
(see reverse before ticking as appropriate)

- ☐ **Bank transfer**
- ☐ **Cheque**
  (UK-resident customers ONLY)
- ☐ **Giro transfer**
- ☐ VISA / EUROCARD MasterCard

Expiry date: _____

Verification code: _____

Name

Address + Post code

Tel. *Email*

Date – – 2007 *Signature*

** cross out what is not applicable*

EL09

Please send this order form to

Elektor Electronics (Publishing)
Regus Brentford
1000 Great West Road
Brentford TW8 9HH
United Kingdom

Tel.: +44 208 261 4509
Fax: +44 208 261 4447
www.elektor-electronics.co.uk.
subscriptions@elektor-electronics.co.uk

ORDERING INSTRUCTIONS, P&P CHARGES

Except in the USA and Canada, all orders, except for subscriptions (for which see below), must be sent BY POST or FAX to our Brentford address using the Order Form overleaf. On-line ordering: http://www.elektor-electronics.co.uk
Readers in the USA and Canada may (but are not obliged to) send orders, except for subscriptions (for which see below), to the USA address given on the order form. Please apply to Old Colony Sound for applicable P&P charges. Please allow 4-6 weeks for delivery.
Orders placed on our Brentford office must include P&P charges (Priority or Standard) as follows: Europe: £6.00 (Standard) or £7.00 (Priority) Outside Europe: £9.00 (Standard) or £11.00 (Priority)

HOW TO PAY

All orders must be accompanied by the full payment, including postage and packing charges as stated above or advised by Customer Services staff.

Bank transfer into account no. 40209520 held by Elektor Electronics with ABN-AMRO Bank, London. IBAN: GB35 ABNA 4050 3040 2095 20. BIC: ABNAGB2L. Currency: sterling (UKP). Please ensure your full name and address gets communicated to us.
Cheque sent by post, made payable to Elektor Electronics. We can only accept sterling cheques and bank drafts from UK-resident customers or subscribers. We regret that no cheques can be accepted from customers or subscribers in any other country.
Giro transfer into account no. 34-152-3801, held by Elektor Electronics. Please do not send giro transfer/deposit forms directly to us, but instead use the National Giro postage paid envelope and send it to your National Giro Centre.
Credit card VISA and MasterCard can be processed by mail, email, web, fax and telephone. Online ordering through our website is SSL-protected for your security.

COMPONENTS

Components for projects appearing in Elektor Electronics are usually available from certain advertisers in this magazine. If difficulties in the supply of components are envisaged, a source will normally be advised in the article. Note, however, that the source(s) given is (are) not exclusive.

TERMS OF BUSINESS

Delivery Although every effort will be made to dispatch your order within 2-3 weeks from receipt of your instructions, we can not guarantee this time scale for all orders. **Returns** Faulty goods or goods sent in error may be returned for replacement or refund, but not before obtaining our consent. All goods returned should be packed securely in a padded bag or box, enclosing a covering letter stating the dispatch note number. If the goods are returned because of a mistake on our part, we will refund the return postage. **Damaged goods** Claims for damaged goods must be received at our Brentford office within 10-days (UK); 14-days (Europe) or 21-days (all other countries). **Cancelled orders** All cancelled orders will be subject to a 10% handling charge with a minimum charge of £5.00. **Patents** Patent protection may exist in respect of circuits, devices, components, and so on, described in our books and magazines. Elektor Electronics does not accept responsibility or liability for failing to identify such patent or other protection. **Copyright** All drawings, photographs, articles, printed circuit boards, programmed integrated circuits, diskettes and software carriers published in our books and magazines (other than in third-party advertisements) are copyright and may not be reproduced or transmitted in any form or by any means, including photocopying and recording, in whole or in part, without the prior permission of Elektor Electronics in writing. Such written permission must also be obtained before any part of these publications is stored in a retrieval system of any nature. Notwithstanding the above, printed-circuit boards may be produced for private and personal use without prior permission. **Limitation of liability** Elektor Electronics shall not be liable in contract, tort, or otherwise, for any loss or damage suffered by the purchaser whatsoever or howsoever arising out of, or in connexion with, the supply of goods or services by Elektor Electronics other than to supply goods as described or, at the option of Elektor Electronics, to refund the purchaser any money paid in respect of the goods. **Law** Any question relating to the supply of goods and services by Elektor Electronics shall be determined in all respects by the laws of England.

September 2007

SUBSCRIPTION RATES FOR ANNUAL SUBSCRIPTION

	Standard	Plus
United Kingdom	**£41.90**	**£48.80**
Surface Mail		
Rest of the World	**£54.50**	**£61.40**
USA & Canada	**US$ 95.50**	**US$106.50**
Airmail		
Rest of the World	**£68.90**	**£75.80**
USA & Canada	**US$120.00**	**US$131.00**

HOW TO PAY

Bank transfer into account no. 40209520 held by Elektor Electronics. with ABN-AMRO Bank, London. IBAN: GB35 ABNA 4050 3040 2095 20. BIC: ABNAGB2L. Currency: sterling (UKP). Please ensure your full name and address gets communicated to us.

Cheque sent by post, made payable to Elektor Electronics. We can only accept sterling cheques and bank drafts from UK-resident customers or subscribers. We regret that no cheques can be accepted from customers or subscribers in any other country.

Giro transfer into account no. 34-152-3801, held by Elektor Electronics. Please do not send giro transfer/deposit forms directly to us, but instead use the National Giro postage paid envelope and send it to your National Giro Centre.

Credit card VISA and MasterCard can be processed by mail, email, web, fax and telephone. Online ordering through our website is SSL-protected for your security.

SUBSCRIPTION CONDITIONS

The standard subscription order period is twelve months. If a permanent change of address during the subscription period means that copies have to be despatched by a more expensive service, no extra charge will be made. Conversely, no refund will be made, nor expiry date extended, if a change of address allows the use of a cheaper service.
Student applications, which qualify for a 20% (twenty per cent) reduction in current rates, must be supported by evidence of studentship signed by the head of the college, school or university faculty.
A standard Student Subscription costs £33.50, a Student Subscription-Plus costs £40.40 (UK only).
Please note that new subscriptions take about four weeks from receipt of order to become effective.
Cancelled subscriptions will be subject to a charge of 25% (twenty-five per cent) of the full subscription price or £7.50, whichever is the higher, plus the cost of any issues already dispatched. Subsciptions cannot be cancelled after they have run for six months or more.

January 2007

elektor electronics

leading the way

NEW

309 Circuits

The present tenth edition of the popular '30x Circuits' series of books once again contains a comprehensive variety of circuits, sub-circuits, tips and tricks and design ideas for electronics. These 309 Circuits offer a representative indication of present-day electronics.

Regular '30x series' enthusiasts will no doubt know what to expect: 309 Circuits contains many fully elaborated electronics projects. In addition, there are numerous ideas, each of which with a potential for use in your own research, projects and applications. Among many other inspiring topics, the following categories are well presented in this book: test & measurement, RF (radio), computers and peripherals, audio & video, hobby and modelling, microcontrollers, home & garden, power supplies & battery chargers, etcetera.

ISBN 978-0-905705-69-9
Approx. 432 pages
£19.95 / US$ 39.95

Complete your 30x circuits series now!

Order now using the Order Form in the Readers Services section in this issue.
Elektor Electronics (Publishing)
Regus Brentford
1000 Great West Road
Brentford TW8 9HH
United Kingdom
Tel. +44 208 261 4509

See also www.elektor-electronics.co.uk

Index of Advertisers

Antex Electronics Ltd . . . . . *www.antex.co.uk* 41
ATC Semitec Ltd, Showcase. . . . . *www.atcsemitec.co.uk* 78
Avit Research, Showcase. . . . . *www.avitresearch.co.uk* 78
Beijing Draco . . . . . *www.ezpcb.com* 53
Beta Layout, Showcase . . . . . *www.pcb-pool.com*. 53, 78
Bitscope Designs . . . . . *www.bitscope.com* 3
Byvac Electronics, Showcase. . . . . *www.byvac.co.uk* 78
Decibit Co. Ltd, Showcase . . . . . *www.decibit.com* 78
EasyDAQ, Showcase . . . . . *www.easydaq.biz* 78
Easysync, Showcase . . . . . *www.easysync.co.uk*. 78
Elnec, Showcase . . . . . *www.elnec.com* 78
Eurocircuits . . . . . *www.eurocircuits.com* 6
First Technology Transfer Ltd, Showcase . *www.ftt.co.uk* 71, 78
FlexiPanel Ltd, Showcase. . . . . *www.flexipanel.com* 78
Future Technology Devices, Showcase . . . *www.ftdichip.com*. 78
Futurlec, Showcase . . . . . *www.futurlec.com*. 78
Jaycar Electronics . . . . . *www.jaycarelectronics.co.uk*. 2
JB Systems, Showcase . . . . . *www.modetron.com* 78
Labcenter. . . . . *www.labcenter.com*. 88
Lektronix . . . . . *www.lektronix.net* 7
London Electronics College, Showcase . . *www.lec.org.uk*. 78
Marchand Electronics Inc, Showcase . . . . *www.marchandelec.com*. 78
Mikro Elektronika . . . . . *www.mikroe.com* 31
MQP Electronics, Showcase. . . . . *www.mqp.com* 79
New Wave Concepts, Showcase . . . . . *www.new-wave-concepts.com* 79
Newbury Electronics . . . . . *www.newburyelectronics.co.uk*. 75
Number One Systems . . . . . *www.numberone.com*. 53
Nurve Networks . . . . . *www.xgamestation.com* 71
Paltronix. . . . . *www.paltronix.com* 45
Peak Electronic Design. . . . . *www.peakelec.co.uk* 13
Pico. . . . . *www.picotech.com* 57
Quasar Electronics . . . . . *www.quasarelectronics.com* 61
Robot Electronics, Showcase. . . . . *www.robot-electronics.co.uk*. 79
Scantool *www.ElmScan5.com/elektor* 6
Showcase 78, 79
SourceBoost Technologies, Showcase . . . *www.sourceboost.com* 79
Tsien (UK) Ltd, Showcase . . . . . *www.componentbin.com* 71, 79
TTE Systems . . . . . *www.tte-systems.com* 11
Ultraleds, Showcase . . . . . *www.ultraleds.co.uk* 79
University of Derby. . . . . *www.derby.ac.uk/adt*. 57
USB Instruments, Showcase . . . . . *www.usb-instruments.com* 79
Virtins Technology, Showcase . . . . . *www.virtins.com* 79

Advertising space for the issue of 22 October 2007 may be reserved not later than 25 September 2007
with Huson International Media – Cambridge House – Gogmore Lane – Chertsey, Surrey KT16 9AP – England – Telephone 01932 564 999 – Fax 01932 564998 – e-mail: gerryb@husonmedia.com to whom all correspondence, copy instructions and artwork should be addressed.

PROTEUS DESIGN SUITE

TIME FOR A CHANGE ?

NEW IN DESIGN SUITE 7:

NEW: Redesigned User Interface includes modeless selection, modeless wiring and intuitive operation to maximise speed and ease of use.

NEW: Design Explorer provides easy navigation, design inspection tools and cross-probing support to improve quality assurance and assist with fault finding.

NEW: 3D Visualisation Engine provides the means to preview boards in the context of a mechanical design prior to physical prototyping.

NEW: Simulation Advisor includes reporting on simulation problems with links to detailed troubleshooting information where appropriate.

NEW: Trace capability within both MCU and peripheral models provides detailed information on system operation which allows for faster debugging of both hardware and software problems.

NEW: Hundreds of new device models including PIC24, LPC2000, network controllers and general purpose electronic components.

Electronic Design From Concept To Completion

Labcenter Electronics www.labcenter.com

Labcenter Electronics Limited
Registered in England 4692454

E-mail: info@labcenter.com Tel: +44 (0) 1756 753440 Fax: +44 (0) 1756 752857

Registered Address: 53-55 Main Street, Grassington, North Yorks, UK, BD23 5AA