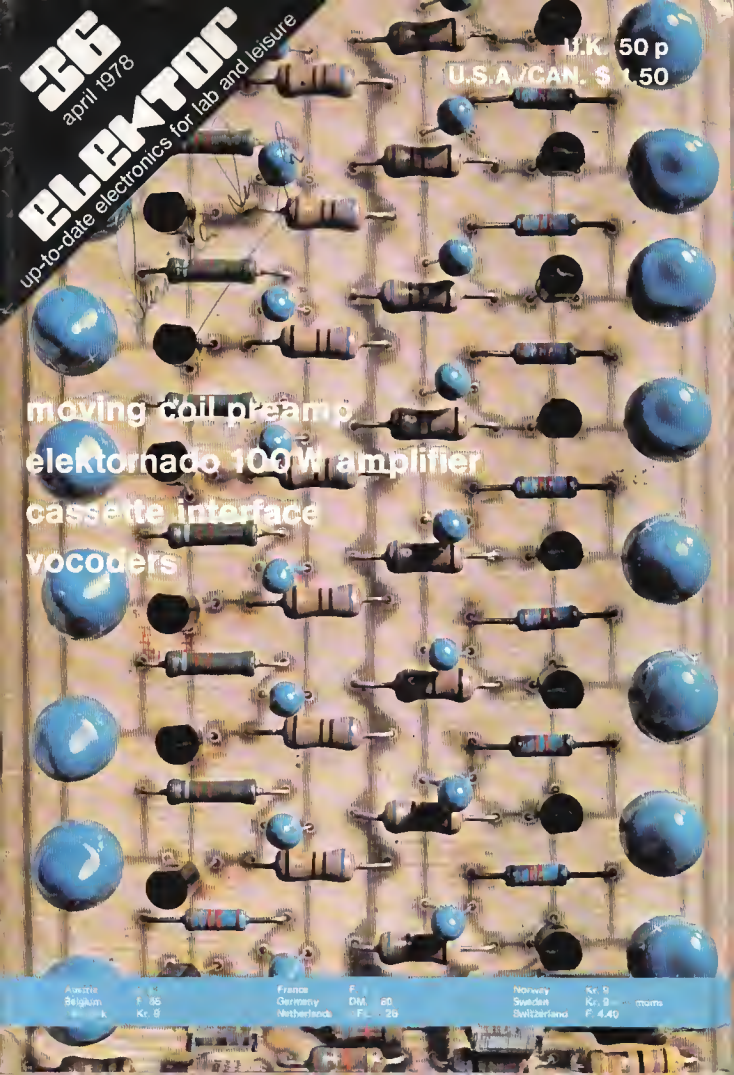
36
april 1978
elektor
up-to-date electronics for lab and leisure
U.K. 50 p
U.S.A./CAN. $ 1.50
moving coil preamp
elektornado 100W amplifier
cassette interface
vocoders
Austria
Belgium
Kr. 9
France
Germany
Netherlands
Norway
Sweden
Switzerland
Kr. 9
F 4.40

Surinder Singh

ELEKTOR 1977 ISSUES

In 1977 we published over 200 different designs in Elektor which included approx. 29 Audio articles, 6 Car articles, 18 Design ideas, 18 Domestic circuits, 10 Fun, games and model building Circuits, 18 Information articles . . . . . microprocessors . . . . . , 13 music circuits, ... 12 Paranormal circuits . . . . . , 13 Power supply circuits, 17 R.F. circuits, 37 Test and Measuring Equipment circuits, 7 Time, Timers and counters, circuits, and 11 miscellaneous designs . . . . . .

Due to our increased circulation and popularity of these articles, only limited amounts of 1977 back issues are available so please order your set of issues 21-32, while our stocks last . . . . . we would hate to disappoint you . . . . . .

A more detailed cumulative index for 1977 is published in the December 1977 issue number 32. A list of available printed circuit boards and their prices can be found in the EPS list at the front of this issue.

To order these, please refer to 'Elektor readers service order form' in this issue.

please don't leave your issues of elektor just lying about

a professionally produced magazine deserves to be well kept, so keep your elektors in a binder. order your 1978 binder now. available from elektor publishers ltd.

These smart green binders will keep your copies of Elektor clean and tidy. Each issue is easily removed for reference.

PRICE
£2.30
(incl. p&p)
U.S.A. and Canada $4.00

To order these, please refer to 'Elektor readers service order form' in this issue.

elektor 36 decoder

Volume 4 Number 4

Editor : W. van der Horst
Deputy editor : P. Holmes
Technical editors : J. Barendrecht, G.H.K. Dam, E. Krempelsauer, G.H. Nachbar A. Nachtmann, K.S.M. Walraven
Subscriptions : Mrs. A. van Meyel

International head offices: Elektuur Publishers Ltd.
Bourgognestr. 13a
Beek (L), Netherlands
Tel. 04402-4200
Telex: 56617 Elekt NL

U.K. editorial offices, administration and advertising:
Elektor Publishers Ltd., Elektor House,
10 Longport Street, Canterbury CT1 1PE, Kent. U.K.
Tel.: Canterbury (0227)54430. Telex: 965504.
Please meke ell cheques payable to Elektor Publishers Ltd. at the above address.
Bank: 1. Midland Bank Ltd., Canterbury, A/C no. 11014587 Sorting code 40-16-11, Giro no. 3154254.
2. U.S.A. only: Bank of America, c/o World Way Postal Center, P.O. Box 80689, Los Angeles, CA 90080, A/C no. 12350-04207.
3. Canada only: The Royal Bank of Canada, c/o Lockbox 1969, Postal Station A, Toronto, Ontario, M5W 1W9. A/C no. 160-269-7.

Assistant Manager and Advertising : R.G. Knapp
Editorial : T. Emmens

ELEKTOR IS PUBLISHED MONTHLY on the third Friday of each month.

1. U.K. end all countries except the U.S.A. and Canada:
Cover price £ 0.50.
Number 39/40 (July/August), is a double issue, 'Summer Circuits', price £ 1.—.
Single copies (incl. back issues) are available by post from our Canterbury office, at £ 0.60 (surface mail) or £ 0.95 (air mail).
Subscriptions for 1978, January to December incl., £ 6.75 (surface mail) or £ 12.00 (air mail).
2. For the U.S.A. and Caneda:
Cover price $ 1.50.
Number 39/40 (July/August), is a double issue, 'Summer Circuits', price $ 3.—.
Single copies (incl. back issues) $ 1.50 (surface mail) or $ 2.25 (air mail).
Subscriptions for 1978, January to December incl., $ 18.— (surface mail) or $ 27.— (air mail).
All prices include post & packing.

CHANGE OF ADDRESS. Please allow at least six weeks for change of address. Include your old address, enclosing, if possible, an address label from a recent issue.

LETTERS SHOULD BE ADDRESSED TO the department concerned: TO = Technical Queries; ADV = Advertisements; SUB = Subscriptions, ADM = Administration; ED = Editorial (articles submitted for publication etc.); EPS = Elektor printed circuit board service.

For technicel queries, please enclose a stamped, addressed envelope or a self-addressed envelope plus en IRC.

THE CIRCUITS PUBLISHED ARE FOR domestic use only. The submission of designs or articles to Elektor implies permission to the publishers to elter and translate the text and design, end to use the contents in other Elektor publications and activities. The publishers cannot guarantee to return eny material submitted to them. All drawings, photogrephs, printed circuit boards and articles published in Elektor are copyright and may not be reproduced or imitated in whole or part without prior written permission of the publishers.

PATENT PROTECTION MAY EXIST in respect of circuits, devices, components etc. described in this magazine.
The publishers do not accept responsibility for failing to identify such patent or other protection.

National ADVERTISING RATES for the English-lenguage edition of Elektor and/or international advertising rates for advertising at the same time in the English, Dutch and Germen issues ere aveileble on request.

DISTRIBUTION in U.K.: Spotlight Magazine Distributors Ltd., Spotlight House 1, Bentwell Road, Holloway, London N7 7AX.

DISTRIBUTION in CANADA: Gordon and Gotch (Can.) Ltd., 55 York Street, Toronto, Ontario, M5J 1S4.

Copyright © 1978 Elektor publishers Ltd — Canterbury.

Printed in the Netherlands.

What is a TUN?
What is 10 n?
What is the EPS service?
What is the TO service?
What is a missing link?

Semiconductor types

Very often, a large number of equivalent semiconductors exist with different type numbers. For this reason, 'abbreviated' type numbers are used in Elektor wherever possible:

- '741' stand for μA741, LM741, MC641, MIC741, RM741, SN72741, etc.
- 'TUP' or 'TUN' (Transistor, Universal, PNP or NPN respectively) stand for any low frequency silicon transistor that meets the following specifications:

UCEO, max	20V
IC, max	100 mA
hfe, min	100
Ptot, max	100 mW
fT, min	100 MHz

Some 'TUN's are: BC107, BC108 and BC109 families; 2N3856A, 2N3859, 2N3860, 2N3904, 2N3947, 2N4124. Some 'TUP's are: BC177 and BC178 families; BC179 family with the possible exeption of BC159 and BC179; 2N2412, 2N3251, 2N3906, 2N4126, 2N4291.

- 'DUS' or 'DUG' (Diode Universal, Silicon or Germanium respectively) stands for any diode that meets the following specifications:

	DUS	DUG
UR, max	25V	20V
IF, max	100mA	35mA
IR, max	1μA	100 μA
Ptot, max	250mW	250mW
CD, max	5pF	10pF

Some 'DUS's are: BA127, BA217, BA218, BA221, BA222, BA317, BA318, BAX13, BAY61, 1N914, 1N4148.
Some 'DUG's are: OA85, OA91, OA95, AA116.

- 'BC107B', 'BC237B', 'BC547B' all refer to the same 'family' of almost identical better-quality silicon transistors. In general, any other member of the same family can be used instead.

BC107 (-8, -9) femilies:
BC107 (-8, -9), BC147 (-8, -9), BC207 (-8, -9), BC237 (-8, -9), BC317 (-8, -9), BC347 (-8, -9), BC547 (-8, -9), BC171 (-2, -3), BC182 (-3, -4), BC382 (-3, -4), BC437 (-8, -9), 8C414

BC177 (-8, -9) families:
BC177 (-8, -9), BC157 (-8, -9), BC204 (-5, -6), BC307 (-8, -9), BC320 (-1, -2), BC350 (-1, -2), BC557 (-8, -9), BC251 (-2, -3), BC212 (-3, -4), BC512 (-3, -4), BC261 (-2, -3), BC416.

Resistor and capacitor values

When giving component values, decimal points and large numbers of zeros are avoided wherever possible. The decimal point is usually replaced by one of the following abbreviations:

p	(pico-)	= 10^{-12}
n	(nano-)	= 10^{-9}
μ	(micro-)	= 10^{-6}
m	(milli-)	= 10^{-3}
k	(kilo-)	= 10^{3}
M	(mega-)	= 10^{6}
G	(giga-)	= 10^{9}

A few examples:
Resistance value 2k7: 2700 Ω.
Resistance value 470: 470 Ω.
Capacitance value 4p7: 4.7 pF, or 0.000 000 000 004 7 F . . .
Capacitance value 10n: this is the international way of writing 10,000 pF or .01 μF, since 1 n is 10^{-9} farads or 1000 pF.
Resistors are ¼ Watt 5% carbon types, unless otherwise specified.
The DC working voltage of capacitors (other than electrolytics) is normally assumed to be at least 60 V. As a rule of thumb, a safe value is usually approximately twice the DC supply voltage.

Test voltages

The DC test voltages shown are measured with a 20 kΩ/V instrument, unless otherwise specified.

U, not V

The international letter symbol 'U' for voltage is often used instead of the ambiguous 'V'. 'V' is normally reserved for 'volts'. For instance: U_b = 10 V, not V_b = 10 V.

Mains voltages

No mains (power line) voltages are listed in Elektor circuits. It is assumed that our readers know what voltage is standard in their part of the world!
Readers in countries that use 60 Hz should note that Elektor circuits are designed for 50 Hz operation. This will not normally be a problem; however, in cases where the mains frequency is used for synchronisation some modification may be required.

Technical services to readers

- **EPS service.** Many Elektor articles include a lay-out for a printed circuit board. Some — but not all — of these boards are available ready-etched and predrilled. The 'EPS print service list' in the current issue always gives a complete list of available boards.
- **Technicel queries.** Members of the technical staff are available to answer technical queries (relating to articles published in Elektor) by telephone on Mondays from 14.00 to 16.30. Letters with technical queries should be addressed to. Dept. TO. Please enclose a stamped, self addressed envelope; readers outside U.K. please enclose an IRC instead of stamps.
- **Missing link** Any important modifications to, additions to, improvements on or corrections in Elektor circuits are generally listed under the heading 'Missing Link' at the earliest opportunity.

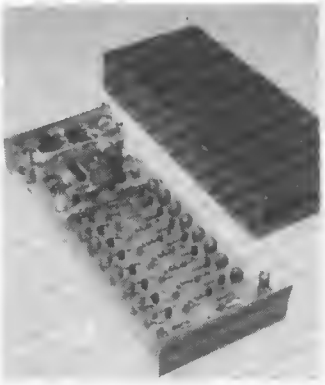

It is generally agreed that, as far as sound quality is concerned, moving-coil pickup cartridges have the edge over their moving-magnet counterparts. The moving coil preamp design presented here can be built for around one-tenth the cost of a comparable commercial unit.

p. 4-02

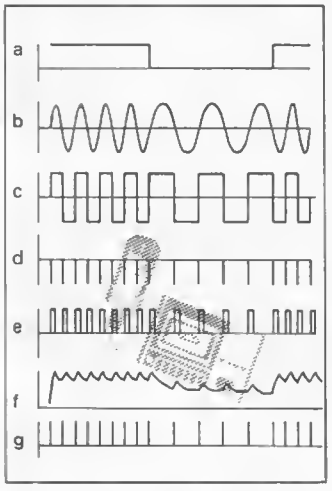

Low cost, high transmission rate and complete reliability were the design requirements for the cassette interface described in the following article. The interface makes very few demands on the sound quality of the recorder, and can transfer data at a rate of up to 1200 Baud.

p. 4-20

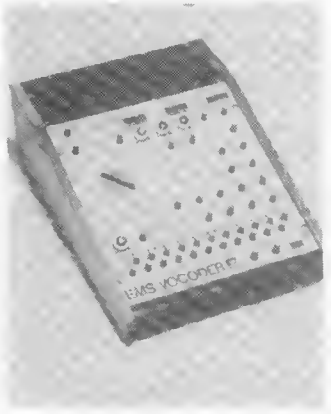

An orchestra suddenly begins to recite a passage of Shakespeare, an electric guitar reads the news, the voice of a talker unexpectedly changes sex, a single voice sounds like a chorus – these are just a few of the amazing effects which can be obtained with a new electronic instrument – the vocoder. This article explains the ins and outs of this fascinating new development in the field of electronic 'music'.

p. 4-27

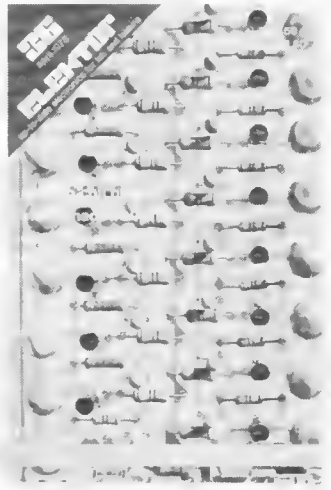

The uncommon design approach used in the moving coil preamp is reflected in the repetitive nature of the printed circuit board!

contents

selektor 4-01

moving coil preamp 4-02

electronic input selector 4-06

elektornado 4-07
The Elektornado is a high-fidelity amplifier offering extremely good performance at moderate cost. The use of an IC for the input and driver stages reduces component count and allows an extremely compact construction. Two amplifier channels can be accommodated on a single (small) printed circuit board either as a 2 x 50 W stereo amplifier or a 100 W mono bridge amplifier.

stepped volume control 4-12

real load resistors 4-13

compander 4-14
Until recently, companders were fairly complicated circuits. Now, however, they are available in the form of integrated circuits, one of which, the Exar XR 2216, is discussed in this article. This IC can be used in a variety of applications such as amateur radio, PA systems, transcription of recorded material from disc to tape etc.

stereo pan pot 4-17

723 as a constant current source 4-18
The μA 723 precision voltage regulator IC is well known for its versatility, good line and load regulation, and low temperature coefficient. In addition to its many uses as a voltage regulator, it can also be used as a precision current regulator (constant current source).

cassette interface 4-20

car rip-off protection – W. Braun 4-26

vocoders (1) – C. Chapman 4-27

formant – the elektor music synthesiser (10) . 4-33
C. Chapman
This final part of the Formant series completes the description of the synthesiser by describing the COM (control and output module) and by giving an overall wiring diagram. Possibilities for further expansion of the system are also discussed.

loudspeaker connections 4-39

market 4-40

tup-tun-dug-dus, ttl ics, cmos ics E-17

advertisers index E-21

General purpose active filter

Due to the previous successes of the AF100 Bi-Quad active filter and the AF120 Gyrator, National Semiconductor has introduced two new standard 'building block' filters, the AF150 and AF151.
The AF150 is a high frequency version of the AF100. Whereas the AF100 is limited to an upper frequency of 10 kHz and a center frequency - Q product of 50,000, the new AF150 has extended the upper frequency range to 100 kHz and center frequency - Q products to 200,000. This has been accomplished by using high frequency operational amplifiers and lascr trimmed resistors.
Like its low frequency brother, the AF150 is a Bi-Quad configuration and offers extremely low sensitivity to external component changes. It simultaneously provides low pass, high pass and bandpass outputs while requiring only four external resistors to independently set the frequency, Q, and gain of the filter. In addition, by using an external operational amplifier, the LF356, all pass and notch filters can be formed.
Another new device, the AF151 is a dual Bi-Quad filter; that is, it provides two separate Bi-Quad active filters in one package. The performance of each filter section is identical to that of the AF100. This allows the user to easily design fourth-order filters in a single package.
In fact, because the package also contains two uncommitted operational amplifiers that can be used as buffers, summing amplificrs or elsewhere in the system, a really clever designer could make use of these amplifiers to design up to eight order filters in a single package. For example, one AF151 could be used for the transmit filter and one AF151 could be used as the receive filter in an asynchronous modem. It could easily be made to switch between originate and answer modes.
It appears that most filter being synthesized using Bi-Quad filters are of fourth-order and higher. For this reason it was decided to put it all in one package to offer the user lower manufacturing costs which are attendant with package insertion and smaller P.C. board space.
'The active filter revolution maybe analogous to the opamp revolution. As with an opamp, the user can simply put a few resistors around it and it does a specific job. It's a general purpose device, easily tailored, and saves P.C. board space, design time and money'.
There are thousands of uses for these filters. Once the designer cstablishes thc center frequency, Q and gain requirements, a complicated sixth order filter design will normally take less than half an hour.

National Semiconductor GmbH
Industriestraße 10
D-8080 Fürstenfeldbruck
West Germany

(295 S)

Electronic shredder

The electronically sensing Fordishred 1800 represents a major advance in shredder technology. In addition to a power overload cut-out sensor, the 1800 features a unique electronic sensing device for paper load control. If the shredder is overloaded, the electronic sensor detects this before jamming occurs. The offending material is then rejected for separation and reintroduction. This means the operator can leave the machine unattended, secure in the knowledge that it will deal safely and efficiently with any prospective overload.
The Fordishred 1800 is precision-engineered and robustly built to take the strain of constant heavy duty shredding in commercial or industrial environments. Suitable for centralised operation, the powerful 1800 has an 18¾" wide throat and a voracious appetite, shredding cardboard and paper waste into ¼" strips at the rate of ¾ ton per hour of continuously fed paper. Operating from a standard 13 amp power point, and working at a speed of 60 ft per minute, the machine will shred a complete file of some 50 sheets - including staples, pins and paper clips – in one pass! Destroyed material is simply cjected beneath the machine into a polythene sack. The sack is securely mounted on runners and, when full, can be slid out and replaced with a new one in seconds.
The 1800 is also an excellent machine for turning waste into profit by recycling waste paper to produce good quality packaging material for internal use or resale.
The machine is mounted on a rigidly constructed stand with four rubber-wheeled castors for complete mobility: the front two castors are fitted with brakes so that the shredder will remain completely stable whilst in use. To aid the operator further, the 1800 can be supplied with either a feeding shelf and side table for storing material prior to shredding or with a large work shelf for sorting loads.
The control panel, which faces the operator while the machine is in use, has well-spaced out, colour coded, 'forward' 'reverse' and 'stop' buttons. For added safety a master key is required to switch on the power. Conforming to BS 4644 and BS 3861 specifications for electrical and mechanical standards, the 1800 is powered by a 1½ hp motor and operates on standard single phase 13 amp electricity supply. It measures 790 mm x 590 mm x 1092 mm high including stand (31" x 23" x 43"). The price is £ 1400 excluding VAT.

Fordigraph Division of Ofrex Limited,
Ofrex House, Stephen Street,
London W1A 1EA, England.

(289 S)

mini-selektor

Semiconductors take over from TWTs

The Austrian Broadcasting Corporation (ORF) has replaced a total of ten travelling-wave-tube (TWT) amplifiers in five major transmitting stations by solid-state amplifiers of the type VD 110 from Rohde & Schwarz. Both technical and economic considerations played a role in the decision to reequip the low-power stages of the Band IV/V TV transmitters for the second program.
At about 400 VA each, the power consumption of the solid-state amplifiers is low compared with the 3 kVA of a TWT stage. The costs of the transition will be covered in about two years by the elimination of the tube replacement costs. With a gain of > 30 dB and a bandwidth of 470 to 860 MHz, the VD 110 provides the same functional performance as its predecessor.

(291 S)

moving coil preamp

It is generally agreed that, as far as sound quality is concerned, moving-coil pickup cartridges have the edge over their moving-magnet counterparts. The prices of moving-coil and moving-magnet cartridges of comparable performance are similar, but unfortunately the low output voltage of moving-coil cartridges necessitates the use of a step-up transformer or preamplifier which can cost more than the cartridge itself.
For this reason alone the preamplifier design presented here should be welcomed by those who like to construct their own hi-fi equipment, as it can be built for around one-tenth the cost of a comparable commercial unit.

In these days of laser scanners and microcomputers the mechanical process of a stylus being wiggled about in grooves, which have been scratched out of plastic to resemble the shape of sound waves, seems an incredibly crude and old-fashioned system. If it appears remarkable that such a process has continued in widespread use right up to the present day, it is even more remarkable that what could be described as such a conceptually primitive method allows sound to be reproduced with such startlingly good quality.
Innummerable constructional improvements have ensured that the record player has kept pace with the ever-increasing demands placed upon the fidelity of audio equipment. Better motors, improved drive systems, lighter and higher compliance pickup arms, the introduction of anti-skating compensation, and last but not least, a considerable improvement in the performance of pickup cartridges are all steps in the evolution of the old acoustic gramophone into the modern hi-fi record player.
This process of continual improvement is still evident, although it is now considerably less dramatic than in the past. The comparatively recent advent of direct-drive and crystal-controlled turntables are ample illustration. However as far as the domestic user is concerned, the latter innovation for example, can be counted among the category of snob-value 'improvements' which, although measurable, are audibly undetectable. And it is a somewhat regrettable fact that a number of similar developments are designed more to stimulate sales than improve the user's appreciation of the reproduced sound.
Nonetheless, leaving aside such commercially-inspired innovations, there are still many areas where useful improvements in the audio chain can be made, and one which has – justifiably – received recent attention is the pickup cartridge.
A commendable development in this respect has been the trend to view the cartridge and pickup arm as a single unit, recognising the fact that one cannot assess the performance of the one without taking the other into account as well. A happy consequence of this has been the realisation that an extremely high compliance and an almost impracticably low tracking force are not necessarily a prerequisite for top class cartridges.
Possibly these considerations have gained ground due to the increasing acceptance of the view among designers and reviewers of hi-fi equipment that, in addition to all the sophisticated electronic test equipment currently available, we possess two highly advanced but extremely inexpensive measuring devices in the form of our ears! This is a trend which cannot be welcomed too strongly, since ultimately, the assessment of any link in the audio chain must be determined not by specifications, distortion figures, and the like, but by the subjective, if informed, response of the listener.

Moving coil cartridges

The above tendency provides a partial explanation for the recent increase in the popularity of moving coil cartridges. Although in the past they have been accused of poor tracking ability, and suffered from the disadvantage that they have to be returned to the manufacturer for stylus replacement, as well as being comparatively expensive, there has never been any doubt about the musical quality of moving coil pickups.

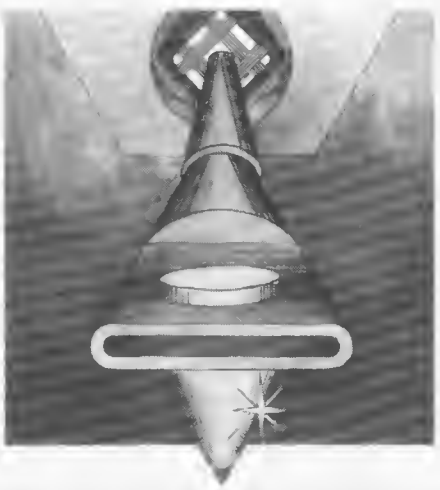

Specification

Frequency response:	7 Hz to 80 kHz, +0, −3 dB.
Voltage gain:	33,5 dB (1)
Input impedance:	75 Ω (1)
Output impedance:	< 100 Ω
Recommended load impedance:	47 k
Maximum input voltage:	23 mV
Total harmonic distortion for U_{in} = 4 mV:	< 0,05%
Channel separation:	< 60 dB
Signal-to-noise ratio:	< 68 dB (2)
Supply voltage:	10 . . . 20 V
Current consumption (stereo version):	100 mA

Notes
(1) Adjustable
(2) Reference level is the output voltage produced using an Ortofon MC-20 cartridge tracking at 10 cm/sec.

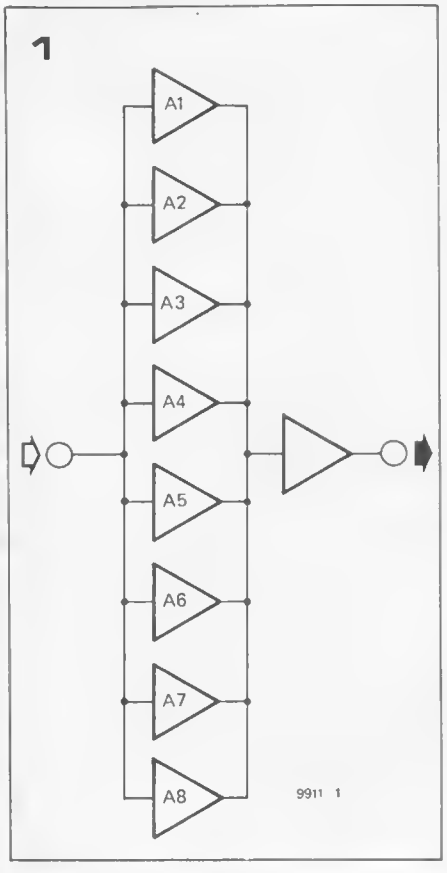

Figure 1. Block diagram showing the principle of a noise-cancelling amplifier.

Figure 2. Complete circuit of one channel of the moving coil pickup preamplifier.

While top-class cartridges of both moving-magnet and moving-coil types are capable of excellent performance, the sound of a moving-coil cartridge possesses a clarity and transparency not obtained from moving magnet types. Thus many reviewers were inclined to have mixed feelings about this type of cartridge, since listening tests often gave much better results than could be expected on the basis of *measured* performance.

The question which no doubt most prospective buyers will ask, namely whether moving coil pickups are better than moving magnet types, fortunately does not fall within our brief. Indeed this is a question to which even reviewers of hi-fi equipment cannot really be expected to provide a generally valid reply, since the sound quality will be assessed differently by each reviewer.

A distinctive feature of moving coil pickups is the exceptionally direct and clear reproduction, which tends to distinguish them from their moving magnet colleagues. However there are top-quality moving magnet cartridges which often seem to possess just the right character for particular listeners, so that the serious audiophile should always take the trouble to compare different types of cartridges before making a purchase.

Unfortunately however, an effective comparison of different types of pickup is not always possible, since a moving coil cartridge produces an output voltage that is only a fraction of that produced by a moving magnet type. Thus to the not inconsiderable price of a moving coil cartridge has to be added the cost of a step-up transformer or – preferably, in view of its higher fidelity and lower sensitivity to hum – that of a special preamplifier. A suitable transformer will cost around £ 15, whilst a preamplifier could cost anything between £ 50 and £ 80 – sufficient reason for many prospective users to settle for a moving magnet cartridge.

It is clear therefore that a powerful argument exists for building a suitable preamp oneself, thereby obviating the need to sacrifice one's musical discrimination for reasons of cost.

Preamplifier

Building a good preamplifier for very low signal levels is no easy matter, and the output signal of a moving coil pickup is extremely small indeed. Ortofon cartridges (which we have taken as a reference, since they have about the lowest output signal and since Ortofon is the only manufacturer of pickups who also produces a separate preamplifier) deliver approximately 70 μV per channel at an output impedance of 2 Ω. Thus a gain of around 50 would be required to boost this to the output level of an average moving magnet cartridge. It is clearly a tricky task amplifying such minute signals whilst maintaining an acceptable signal-to-noise ratio. By acceptable we mean a figure of at least 65 dB.

There are only a limited number of possibilities for the design of a suitably linear and low-noise preamp. One could look for an ultra-low-noise semiconductor. However, such a transistor would almost certainly be exorbitantly expensive, whilst availability would also present a thorny problem. Thus this approach does not seem very promising for a do-it-yourself type of project.

The alternative is to construct a simple but inherently low-noise amplifier stage and then see which *readily available* transistors give the best noise figure. Once this has been ascertained, the circuit is optimised for this particular transistor. Then a number of these amplifier stages are connected in parallel, as shown in figure 1. This trick was already explained in the article on the noise cancelling preamp which was published in last year's Summer Circuits issue (Elektor 27/28, circuit 75). If n identical amplifiers are connected in parallel then as far as voltage gain is concerned they will

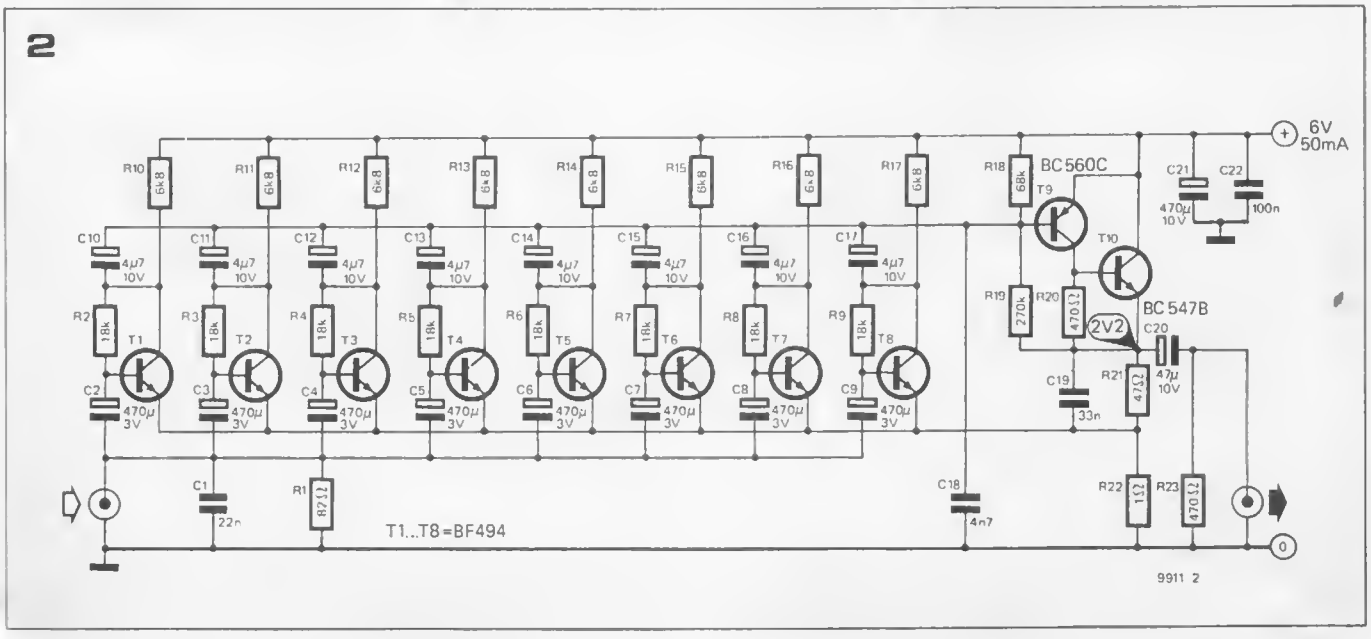

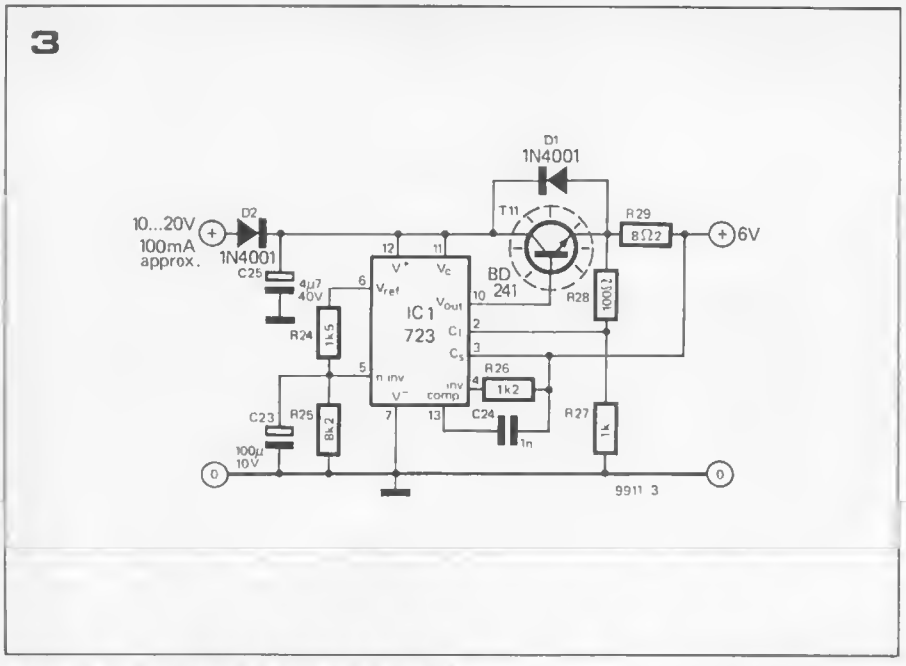

function as a single amplifier, since each is fed with the same input signal, and each has the same gain. The outputs of all the amplifiers are thus equal and in phase. The noise voltages generated by the individual amplifiers, however, are random and, in mathematical terms, are uncorrelated with one another. Partial cancellation of the noise voltages will therefore occur at the amplifiers' common output. The result is that the signal-to noise ratio of the output signal is effectively increased by a factor of $\sqrt{n}$, where n is the number of amplifier stages connected in parallel.

In the case of this circuit, which contains eight amplifier stages, this means an improvement in the signal to noise ratio of 9 dB. To connect more than 8 stages in parallel is not considered worthwhile, since with such an arrangement the law of diminishing returns is applicable: to obtain a further (audible) improvement of 3 dB would require eight extra stages, and so on.

The circuit

The most obvious feature in the circuit diagram shown in figure 2 is the chain of amplifiers T1 ..... T8. Although this arrangement may offend the aesthetic sensibilities of some readers, the resultant signal-to-noise ratio (> 68 dB!) testifies to its efficacy.

After some experiment, a reasonably cheap and commonly available transistor was found for the input stages: the BF 494. It may seem a surprising choice at first sight, since this transistor is normally used in high frequency circuits. However the BF 494 is much more accustomed to handling very small input signals, and in fact proved more suited to this application than the members of, e.g., the BC family of transistors.

Additional voltage gain is provided by T9, and emitter-follower T10 acts as a low impedance output buffer capable of driving the relatively low-impedance feedback loop as well as the recommended output load. R21, R22 and C19 form the negative feedback loop, the mid-band gain being given by the equation $A = 1 + \frac{R_{21}}{R_{22}}$.

With the component values given, the mid-band gain is exactly 48. This is almost exactly the figure needed to boost the output voltage of an Ortofon moving coil pickup to the level of approx. 3.5 mV, which is the average output level of a moving magnet cartridge.

If one has a moving coil cartridge with a greater output voltage (Denon cartridges have an output roughly 4 times greater than average moving coil pickups), then the value of R22 can be increased to

Figure 3. Stabilised power supply for the preamplifier which requires a 10 to 20 V input and provides a regulated 6 V output.

Figure 4. Printed circuit and component layout for a stereo preamp plus power supply (EPS 9911).

Parts list to figure 2 and 4.

Note: for stereo version, two of each required.

Resistors:
(preferably metal film)
R1 = 82 Ω
R2 . . . R9 = 18 k
R10 . . . R17 = 6k8
R18 = 68 k
R19 = 270 k
R20,R23 = 470 Ω
R21 = 47 Ω
R22 = 1 Ω

Capacitors:
C1 = 22 n
C2 . . . C9 = 470 µ/3 V
C10 . . . C17 = 4µ7/10 V
C18 = 4n7
C19 = 33 n
C20 = 47 µ/10 V
C21 = 470 µ/10 V
C22 = 100 n

Semiconductors:
T1 . . . T8 = BF 494 (BF 194, BF 195, BF 495)
T9 = BC 560C, BC 559C, BC 179C or equ.
T10 = BC 547B, BC 107B or equ.

Parts list to figure 3 and 4.

Note: only one of each required.

Resistors:
R24 = 1k5
R25 = 8k2
R26 = 1k2
R27 = 1 k
R28 = 100 Ω
R29 = 8Ω2

Capacitors:
C23 = 100 µ/10 V
C24 = 1 n
C25 = 4µ7/40 V

Semiconductors:
IC1 = 723 (µA723, LM723, etc.)
T11 = BD 241 (fitted with heat sink)
D1,D2 = 1N4001

4

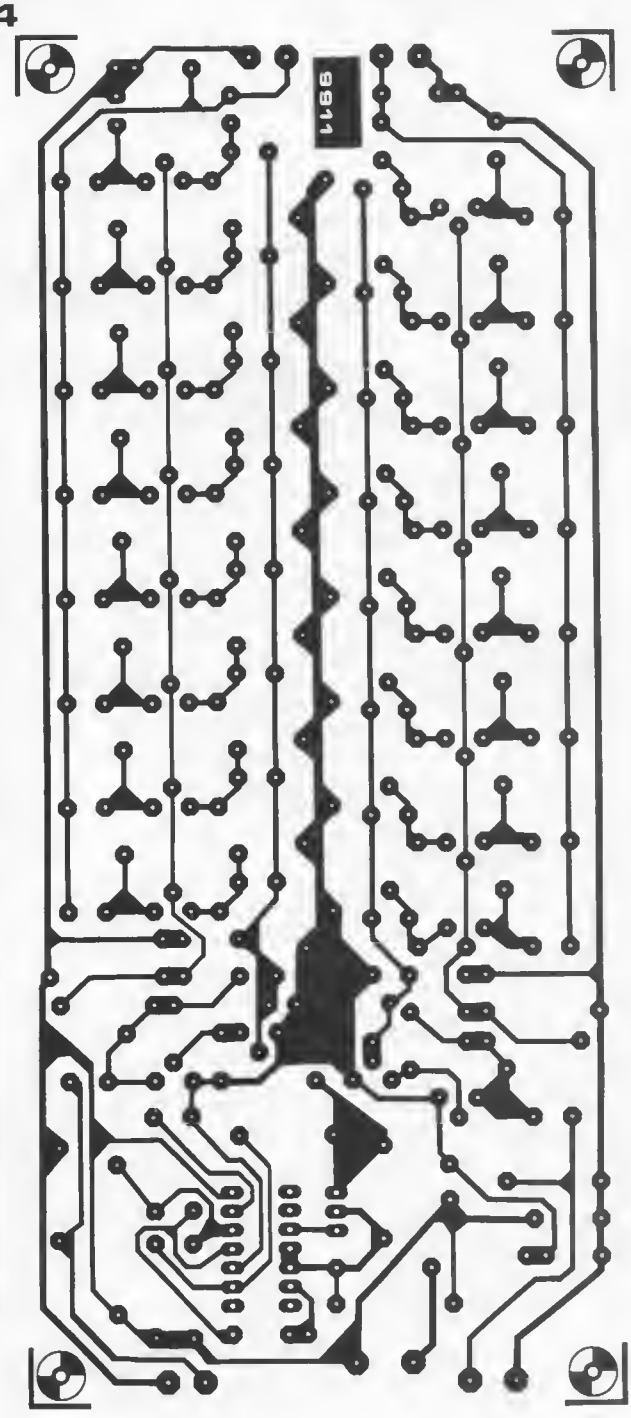

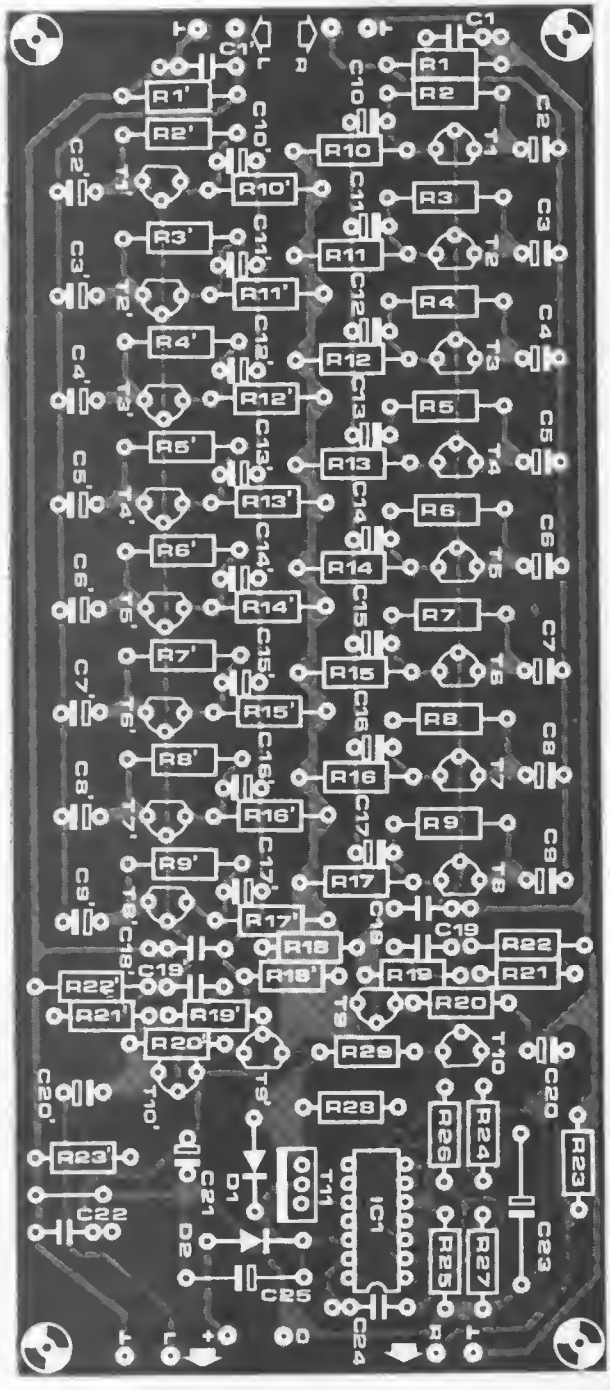

2.2 Ω. This reduces the gain by more than half, so that there is no danger of overloading the disc input of the succeeding audio amplifier.

The input impedance of the amplifier is fairly low, and is largely determined by the value of R1. With the value given in the circuit diagram (R1 = 82 Ω) the input impedance exactly coincides with the recommended load impedance for the Ortofon moving coil pickup of 75 Ω. Other input impedances can be obtained by altering the value of R1 accordingly.

Power supply

The stereo version of the preamp requires a supply voltage of 6 V at 100 mA. This is supplied by a 723 IC voltage regulator with external transistor, as shown in figure 3. The regulator circuit requires an input of between 10 and 20 V at 100 mA. It may be possible to obtain this voltage from some existing piece of equipment such as an audio amplifier or preamp, but if such a voltage is not available then it must be provided by a separate transformer, bridge rectifier and smoothing capacitor. The transformer should have an RMS output voltage between 9 and 15 V at 160 mA and the bridge rectifier and capacitor should be rated at 30 V 100 mA and 220 μ (minimum) 25 V respectively.

Construction

Figure 4 shows a printed circuit board which will acommodate a stereo version of the preamp plus the supply stabiliser. It goes without saying that the components used in the construction must all be of the highest quality, otherwise the s/n ratio may be degraded. Metal-film and metal-oxide types are to be preferred for the resistors, and tantalum types are preferred for the capacitors. The transistors should have the mark of a reputable manufacturer, and if possible the 16 input devices ahould all be from the same production batch.

As the signal levels in the circuit are extremely low, a great deal of care must be taken in the construction. The printed circuit board must be housed in a totally screened (metal) case, and all signal leads should be of low-noise screened cable. To avoid earth loops the input socket(s) should be insulated

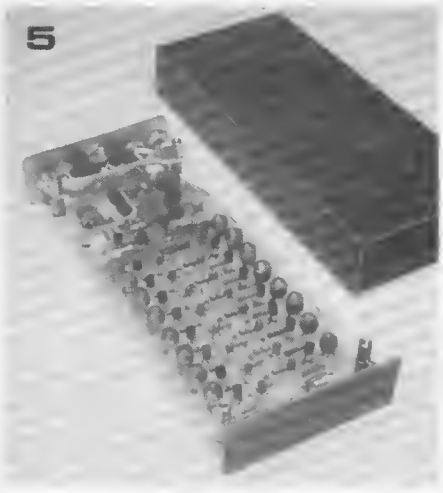

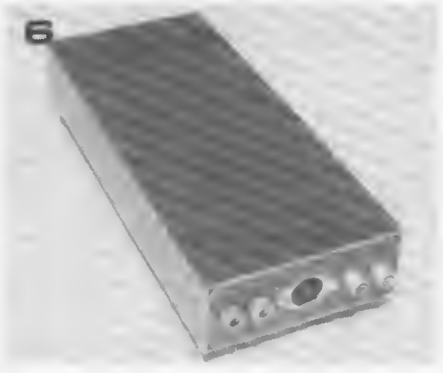

Figure 5. Photograph of the completed prototype, with the cover removed.

Figure 6. Another view of the prototype with the cover in place. In view of the low input signal levels, gold-plated phono connectors are recommended for the input sockets.

from the case.
If the transformer must be mounted in the same housing as the preamp then it should be in a screened enclosure of its own within the main housing, in order to minimise hum pickup, and should be as far away as possible from the input of the preamp. However, in general it is recommended that the transformer is kept well away from the preamp!

Testing

The preamp should work immediately when it is switched on and a suitable signal is fed in. In the unlikely event of a fault occurring, however, the test point voltage shown in figure 2 should be checked. Furthermore the collector voltages of transistors T1 to T8 should be approximately 1V. If the collector voltage of one (or more) transistors is significantly different from the rest then it is best to replace the offending device, since it will probably exhibit different characteristics from the other devices, which could have a detrimental effect on the s/n ratio.
Apart from this, provided care is taken in the construction, no problems should be encountered and the preamp should deliver a performance which compares favourably with that of commercial designs costing many times more.

electronic input selector

In most audio amplifiers the input selector switch is mounted on the front panel of the equipment, whilst the input sockets are mounted on the back panel. This means that the input signal leads must be routed all the way from the back panel to the front panel before going off to the actual amplifier input, thus increasing the possibility of hum and noise pickup crosstalk.
The transistor input selector described here switches the signals at the rear of the amplifier close to the input sockets. Switching is still controlled from the front panel switch, but audio signals no longer flow through it.
One channel of the selector is shown in figure 1. Each input is fed to an emitter follower whose base bias voltage is obtained from the selector switch S1. When a particular input is selected by S1 then the appropriate transistor receives a base bias voltage and is able to pass the input signal. The bases of all the other transistors are pulled down to ground by resistors R_B and are thus cut off.
Since S1 supplies only a DC bias voltage to the selector circuit the length of lead between S1 and the input selector is unimportant. An additional bonus is that the transistors function as impedance converters. The low output impedance means that there is no restriction on the length of lead between the output of the selector circuit and the input of the amplifier. Switching clicks are also suppressed since capacitors C2 cause the base voltages to die away smoothly rather than switching the transistors abruptly as S1 is operated.
The circuit can be extended to any number of inputs and any number of channels simply by adding an extra transistor for each additional input and duplicating the total selector circuit for each additional channel required.

Specification

Impedance of each input	100 k
Output impedance	≤ 1 k
Maximum input voltage	= 1 V RMS (3 V peak to peak)
Gain	= 1 (0 dB)

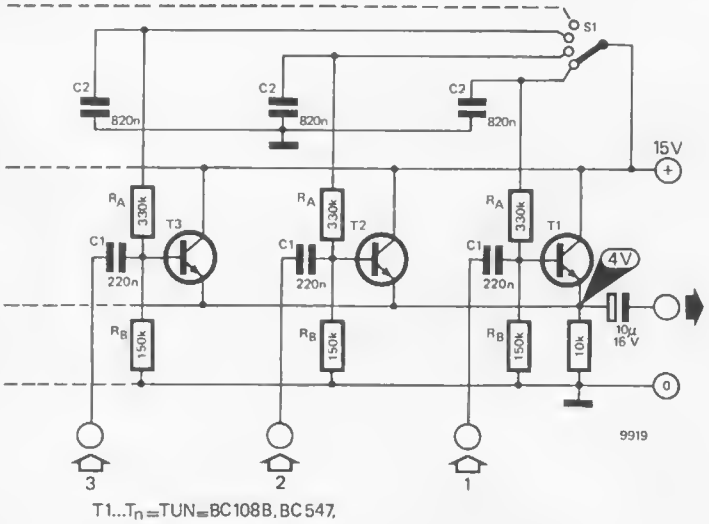

T1...T_n = TUN = BC108B, BC547.

elektornado

The Elektornado is a high-fidelity amplifier offering extremely good performance at moderate cost. The use of an IC for the input and driver stages reduces component count and allows an extremely compact construction. Two amplifier channels can be accommodated on a single (small) printed circuit board either as a 2 x 50 W stereo amplifier or a 100 W mono bridge amplifier.

There has been much debate in hi-fi circles about the necessity for high amplifier output powers, with some maintaining that a high output power is an absolute necessity for undistorted handling of programme peaks, and others maintaining that high-power amplifiers are just a status symbol. Be that as it may, there is no doubt that for many applications such as disco work, or situations where extremely inefficient loudspeakers are being used, a high power output is a definite advantage. With its choice of 50 W or 100 W maximum output power, the Elektornado should certainly satisfy most requirements.

A high output power either entails the use of a high supply voltage or the use of a bridge output stage. A bridge configuration was chosen for the Elektornado for several reasons:

1. It allows relatively inexpensive output devices to be used and avoids the necessity for expensive high-voltage (> 60 V) devices.
2. Each half of a bridge amplifier can be used as an independent, lower power amplifier.

A bridge configuration entails the construction of two virtually complete amplifiers for each channel, so some way had to be found of reducing component count. Fortunately, the input and driver stages of the amplifier can be replaced by a single IC which has recently been introduced, the LM 391. In the past, integrated circuits have not been very suitable for hi-fi applications due to limitations of bandwidth, distortion, noise and operating voltage. The LM 391, however, suffers from none of these disadvantages.

The circuit

The complete circuit of one channel of the amplifier, including the equivalent internal circuit of the LM 391, is shown in figure 1. The IC replaces all the input and pre-driver stages of the amplifier, the only parts of the circuit using discrete transistors being the driver and output stages.

The input stage of the IC consists of a differential amplifier (T_G, T_H) and a current mirror (T_Q, T_P), which forms the collector loads for the differential stage. The signal from the collector of T_H is fed to a cascode stage (T_O, T_N), which has a very high gain, and thence to the output stages of the IC.

The driver and output stages of the amplifier consist of two discrete transistor pairs T1/T3 and T2/T4, the quiescent current of the output stage being set by the collector/emitter voltage of transistor T_K, which is varied by adjusting the base bias by means of P1.

To avoid distortion caused by slew-rate limiting (slope overload), care has been taken in the design of the feedback and compensation networks, and additional protection is provided in the form of an input filter R15/C11, which limits the slew-rate of the input signal. However, this does not have a detrimental effect on the normal frequency response, which begins to roll off at about 30 kHz.

The closed-loop gain of the amplifier is determined by the feedback network R5, R1 and C1. At frequencies where the reactance of C1 is small the gain is given by:

$$A_V = \frac{U_{out}}{U_{in}} = 1 + \frac{R_5}{R_1} \approx 22.$$

At low frequencies the increased reactance of C1 in series with R1 causes the gain to roll off to unity for DC signals. Amongst other things this avoids any DC offset problems which might result from a high DC gain. With the component values shown the voltage gain is approximately 20 (26 dB), which means that the input sensitivity for full output voltage swing is about 1 volt. This should make the circuit suitable for use with most modern preamps.

Table 1 measured with ± 30 V supply.

Maximum output power:	
stereo	2 x 45 W into 4 ohms 2 x 50 W into 8 ohms
mono (bridge)	100 W into 8 ohms (4 ohm load not recommended as current limiting occurs et 45 W)
Frequency response:	6 Hz to 30 kHz (–3 dB)
Total harmonic distortion:	0.1% 40 Hz < f < 10 kHz (see also figure 6)

Circuit protection

Several protection circuits are incorporated into the design to prevent damage to the output transistors under various fault conditions.

Inductor L1, which is wound on R18, protects the output stage when operating into capacitive loads.

Diodes D1 and D2 provide brute-force protection against any transients that might be produced by an inductive load by clamping the maximum output voltage excursion to $\pm U_b$.

A number of sophisticated protection circuits exist within the IC itself. Should

1

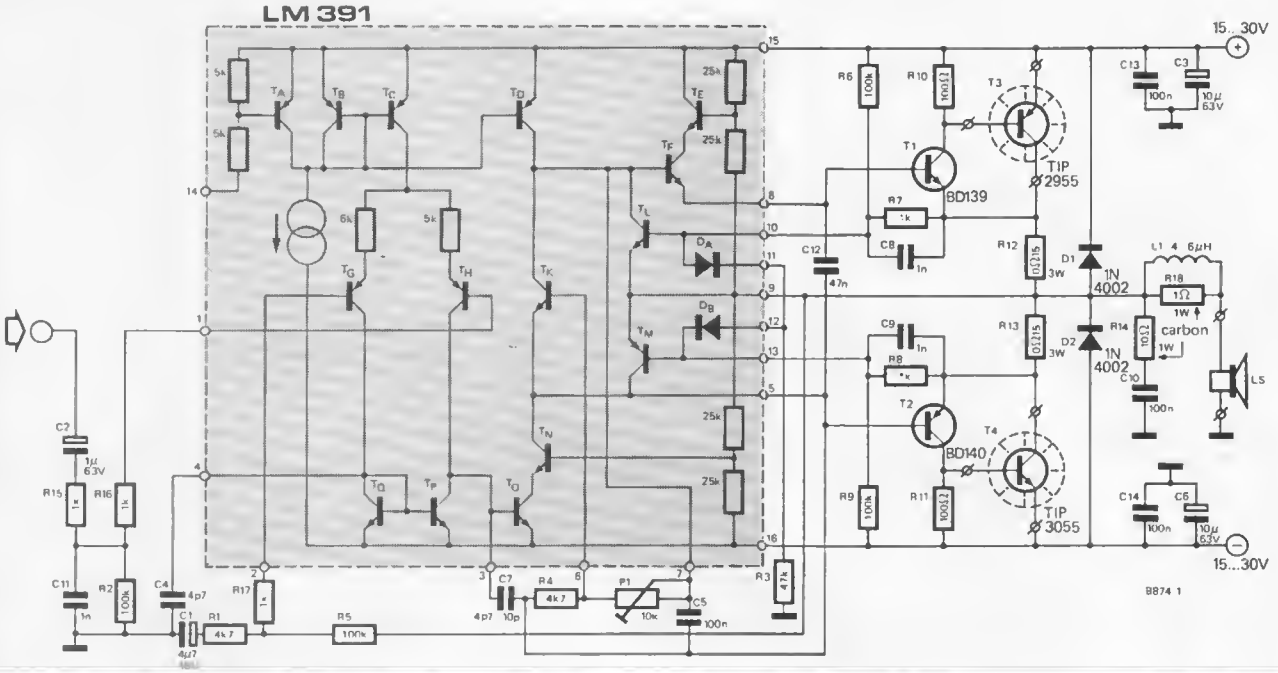

2

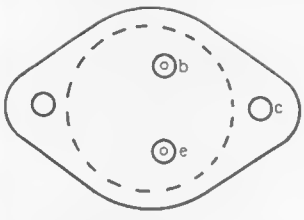

MJ 2955, MJ 3055

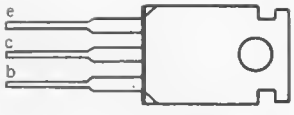

TIP 2955, TIP 3055

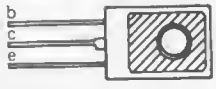

BD 139, BD 140
MJE 2955, MJE 3055

9874 2

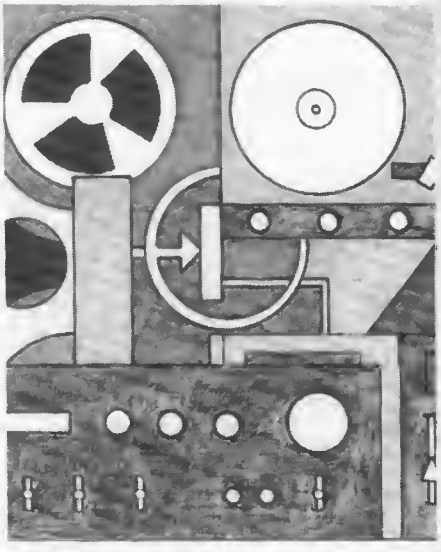

the output current of the amplifier rise above about 4 amps peak the voltage dropped across R12 or R13 will cause transistors T_L or T_M to turn on, thus limiting the output current.

Thermal protection of the output transistors may also be provided as an optional extra if desired. A negative temperature coefficient thermistor, which is in thermal contact with the output transistor heatsink, may be connected between pin 14 of the IC and ground. Current will flow through this thermistor via the two base resistors of T_A. As the temperature increases and the resistance of the thermistor falls this current will increase until the voltage drop across the 5 k resistor is sufficient to turn on T_A. This will shut down current sources T_B, T_C and T_D and cut off the drive to the output stage.

A resistor may need to be included in series with the thermistor to limit the maximum current out of pin 14 to 1 mA, and the thermistor value should be chosen such that the current out of pin 14 will be about 100 µA at the desired cutoff temperature.

Two-channel amplifier

Figure 3 shows the complete circuit of a two-channel amplifier. In this case, for simplicity, the internal circuit of the LM 391 is not shown. With a ± 30V supply each channel of the amplifier will deliver 50 W into an 8 ohm load, or 45 W into a 4 ohm load. By connecting a resistor, R_X, between the output of one channel and the inverting input of the other channel (non-inverting input grounded) the two channels can be made to function as a mono bridge amplifier, with the loudspeaker connected as shown dotted. Note that in this configuration both ends of the loudspeaker are floating!

Theoretically, the maximum output power that can be obtained in the bridge mode is four times that obtained in the normal configuration. However, this would place great stress upon the output transistors and would require much more massive heatsinks and an extremely 'beefy' power supply. The maximum output power into an 8 ohm load in the bridge configuration is therefore restricted to 100 W by current limiting. Operation into a 4 ohm load in the bridge configuration is not recommended as current limiting will restrict the maximum output power to about 45 W.

Printed circuit board

The printed circuit board and component layout for the Elektornado are given in figure 4, and it will be seen that

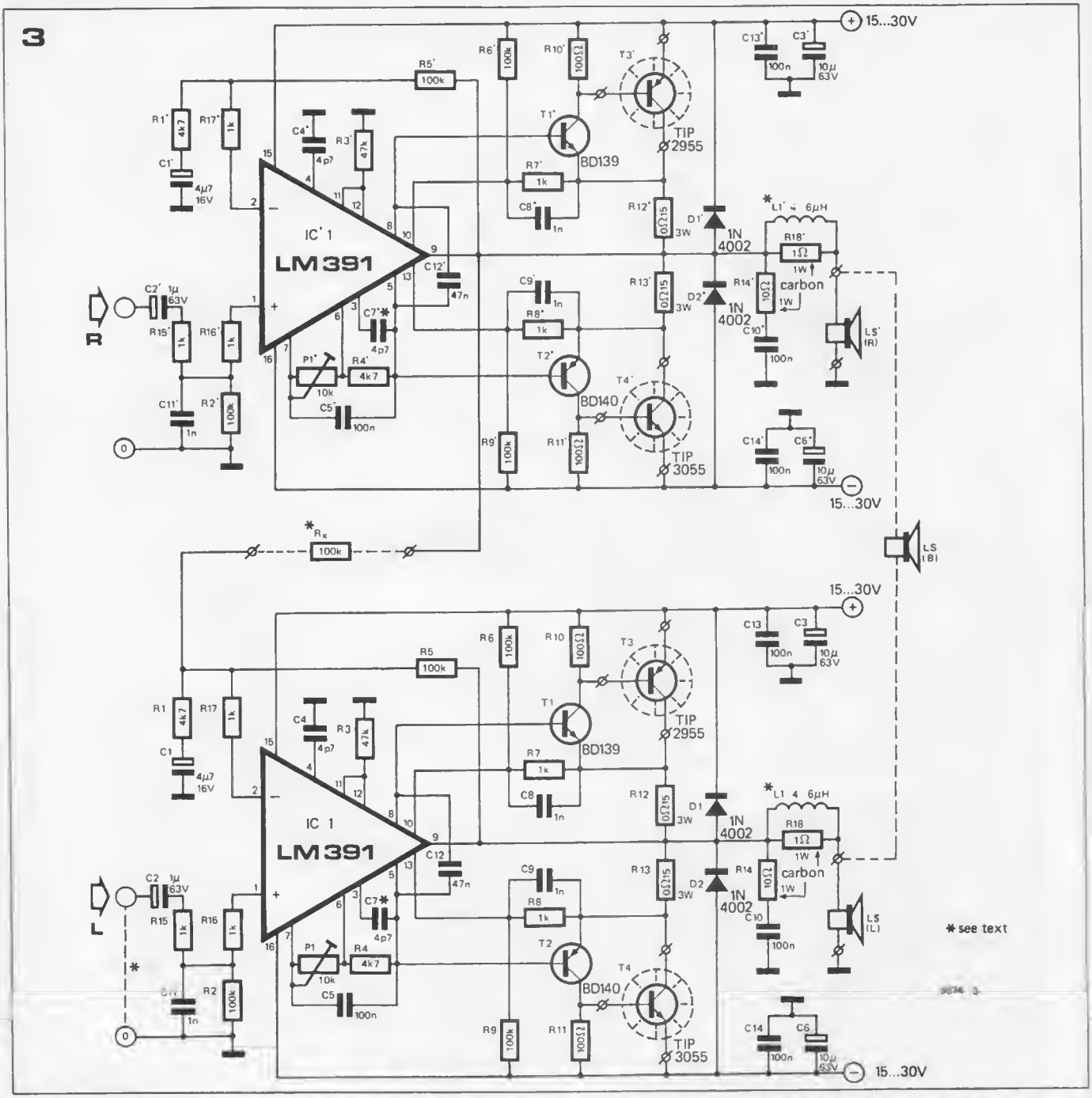

two identical channels are mounted on a single board to facilitate operation in the bridge mode. If this configuration is required then R_X is soldered into place and the input of the left channel is grounded. If the 2 x 50 W stereo version is required then R_X is omitted.

L1 consists of 20 turns of 0.9 mm (20 SWG) enamelled copper wire, wound on the body of resistor R18.

The driver and output transistors are, of course, mounted external to the board on heatsinks, which should have a thermal resistance of less than 1.5°C per watt and should be mounted with the fins running vertically to give a chimney effect which will aid cooling. Painting the heatsinks matt black also improves cooling.

Wiring

To avoid problems of instability, earth loops etc. the wiring layout shown in figure 5 should be followed. For clarity the driver and output transistors are not shown in this diagram. A simple, unstabilised power supply between ± 15 V and ± 30 V is quite adequate for the amplifier, although the maximum output power will only be obtained with the higher supply voltage. Care should be taken to ensure that the off-load voltage of the power supply is no greater than ± 30 V, otherwise there is a danger of damaging the IC or output transistors. The 2 x 20 V RMS secondary rating of the transformer should be considered as an absolute maximum, as this will allow for a +10% variation in mains voltage.

Setting quiescent current

Before applying power to the amplifier P1 and P1' should be turned fully to the

Figure 1. Circuit of one channel of the Elektornado, showing the internal circuit of the LM 391 IC.

Figure 2. Pinning of the driver and output transistors (all bottom view).

Figure 3. Complete circuit of the 50 W per channel/100 W mono amplifier.

Table 1. Principal specifications of the Elektornado amplifier.

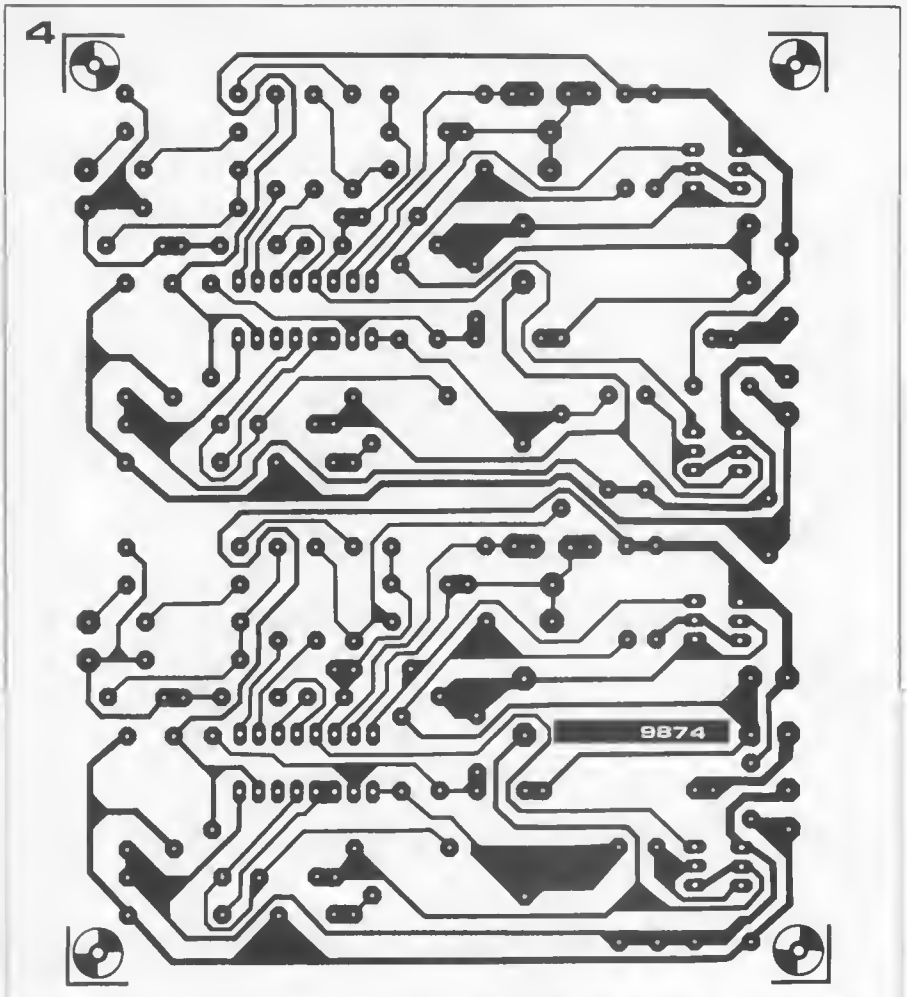

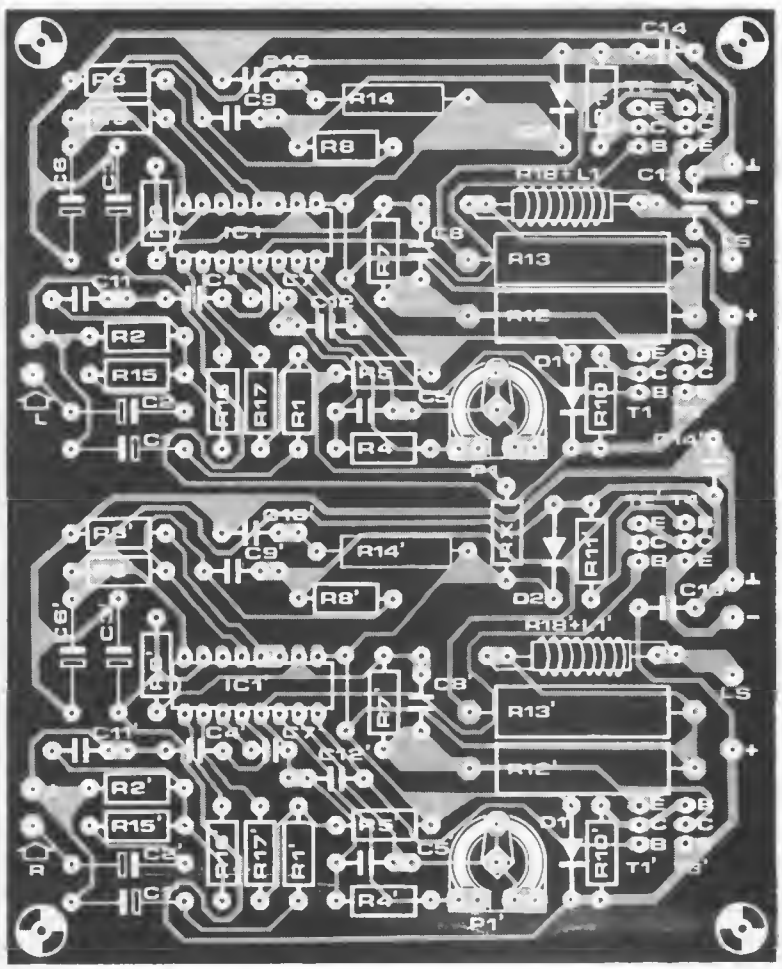

Parts list to figure 5.

Resistors:

R1,R1',R4,R4' = 4k7
R2,R2',R5,R5',
R6,R6',R9,R9',R_X = 100 k
R3,R3' = 47 k
R7,R7',R8,R8',R15,R15',
R16,R16',R17,R17' = 1 k
R10,R10',R11.R11' = 100 Ω
R12,R12',R13,R13' = 0.15 Ω/3 W
R14,R14' = 10 Ω/1 W (carbon film resistor)
R18,R18' = 1 Ω/1 W (carbon film resistor)
P1,P1' = 10 k preset

Capacitors:

C1,C1' = 4μ7/16 V
C2,C2' = 1 μ/63 V
C3,C3',C6,C6' = 10 μ/63 V
C4,C4',C7,C7' = 4p7
C5,C5',C10,C10',C13,C13',
C14,C14' = 100 n
C8,C8',C9,C9',C11,C11' = 1 n
C12,C12' = 47 n

Semiconductors:

IC1,IC1' = LM 391-60 or
LM 391-80
T1,T1' = BD 139
T2,T2' = BD 140
T3,T3' = TIP 2955 or MJE 2955
T4,T4' = TIP 3055 or MJE 3055
D1,D1',D2,D2' = 1N4002

Figure 4. Printed circuit board end component layout for the Elektornedo (EPS 9874).

Figure 5. Wiring diagram for the Elektornado (driver and output trensistors not shown). Figure 5a: stereo version; figure 5b: bridge version.

Figure 6. Total harmonic distortion versus frequency greph for the Elektornado.

5a

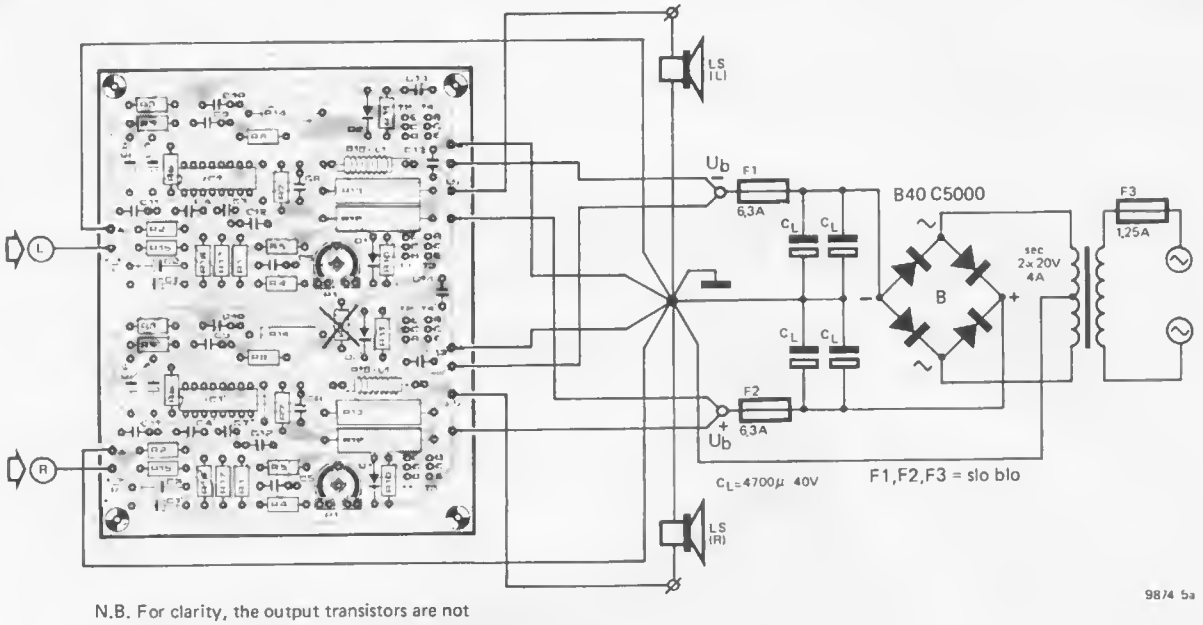

N.B. For clarity, the output transistors are not shown.

5b

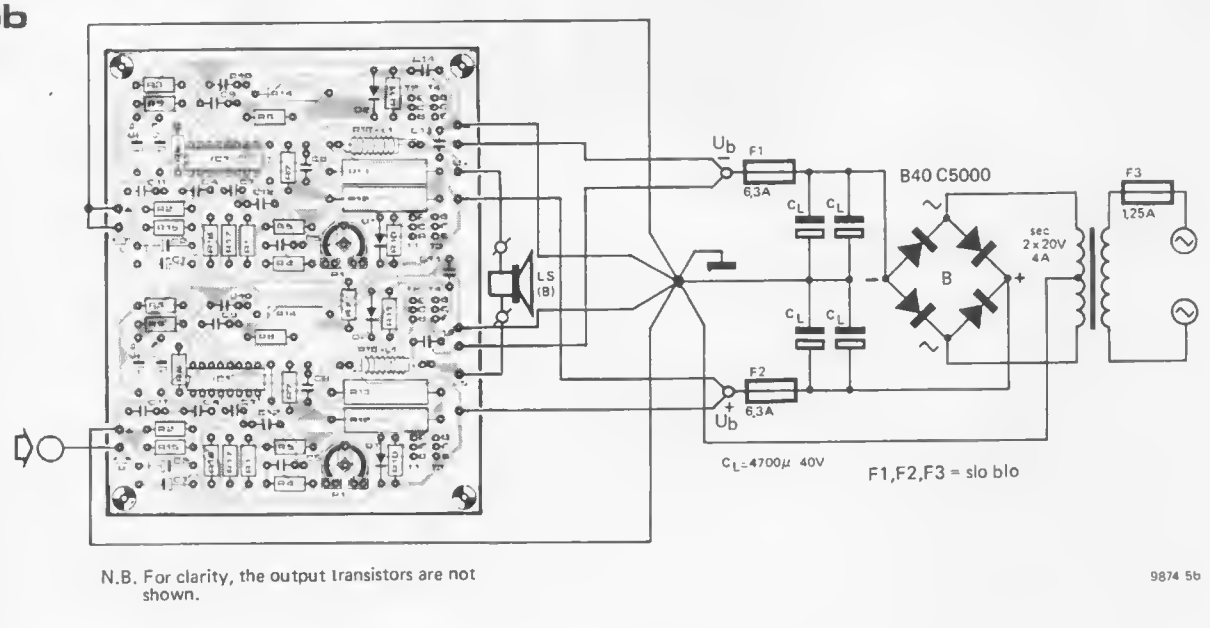

N.B. For clarity, the output transistors are not shown.

left.

A multimeter set to the 100 mA range is then connected in the positive or negative supply lead to the left channel, and P1 is adjusted to give a current of between 50 and 100 mA. The procedure is then repeated for the right channel.

If the amplifier should exhibit any tendency to instability (this may manifest itself as an excessively large and uncontrollable quiescent current) this can be cured by increasing the values of C4 and C7, keeping them of equal value.

Conclusion

The specifications of the Elektornado can safely be called excellent. As can be seen from figure 6 the harmonic distortion is below 0.1% over the entire audio spectrum, and over the important midband frequencies is less than 0.02%. Other important parameters of the amplifier are listed in table 1.

6

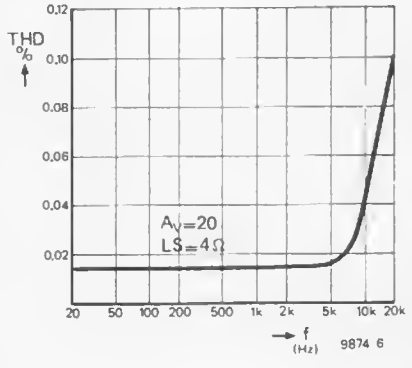

As mentioned previously, the input sensitivity for full output is 1 V RMS, which should be suitable for most preamplifiers. However, if this sensitivity is insufficient the gain of the amplifier may be increased simply by changing the values of R1 and R5 (decreasing R1 and/or increasing R5).

The high output power and excellent specifications of the Elektornado, together with its versatility, should ensure that it will prove the right answer for a great number of amplifier applications.

stepped volume control

Conventional rotary or slider potentiometers suffer from several disadvantages when used as volume controls in an audio system. The ganged, logarithmic potentiometers which are frequently employed in stereo amplifiers frequently suffer from poor matching of the two channels, so that the relative signal levels or balance of the left- and right channels vary as the control is operated. Carbon potentiometers also have a relatively limited life and soon become noisy in operation.

One solution to these problems is to use a stepped volume control consisting of a switched, resistive potential divider, as shown in figure 1. This circuit has several advantages over a conventional potentiometer.

- matching between channels is determined solely by resistor tolerances (5% tolerance should be adequate for most applications)
- the control can be made to have any desired 'law' by suitable choice of resistor values
- within reason, any number of channels can be catered for by using a switch with more wafers
- a long life is obtained, provided a reasonable quality switch is used.

The degree of attenuation produced for a particular setting of the control is given by attenuation = $20 \log (R_r : R_t)$dB, where R_t is the total resistance of the potential divider chain and R_r is the remaining resistance between a particular switch position and ground. The value of individual resistors connected between two adjacent positions of the switch is obviously obtained by subtracting two adjacent values of R_r.

For a volume control a logarithmic law is desirable, which means that the difference in attenuation between any two adjacent settings of the control must be a constant number of dB. Table 1 shows the values of R_r required for 1 dB steps of attenuation from 0 to −60 dB for an R_t value of 100 k (plus an extra step for infinite attenuation). Obviously a practical volume control cannot have this number of steps, as this would require a 62-way switch. On the other hand, the number of switch positions must not be too small, as this will not give sufficiently fine control.

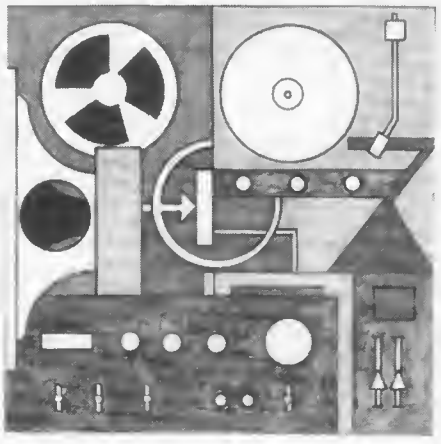

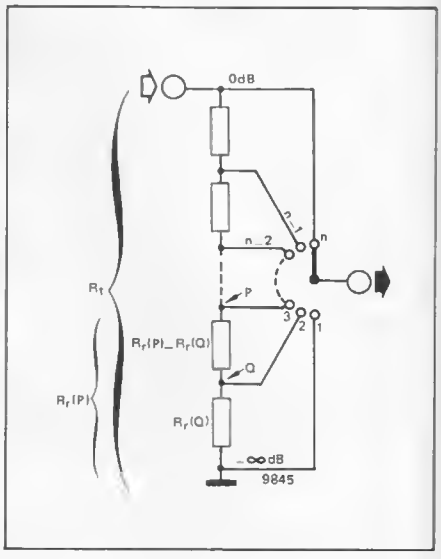

Table 1

dB	R_r (R_t = 100.000 Ω)	dB	R_r (R_t = 100.000 Ω)
0	100.000	−31	2.818
−1	89.125	−32	2.512
−2	79.794	−33	2.239
−3	70.794	−34	1.995
−4	63.095	−35	1.778
−5	56.234	−36	1.585
−6	50.118	−37	1.413
−7	44.668	−38	1.259
−8	39.810	−39	1.122
−9	35.481	−40	1.000
−10	31.622	−41	891
−11	28.184	−42	794
−12	25.119	−43	708
−13	22.387	−44	631
−14	19.952	−45	562
−15	17.783	−46	502
−16	15.849	−47	447
−17	14.125	−48	398
−18	12.589	−49	355
−19	11.220	−50	316
−20	10.000	−51	282
−21	8.913	−52	251
−22	7.943	−53	224
−23	7.079	−54	200
−24	6.310	−55	178
−25	5.623	−56	158
−26	5.012	−57	141
−27	4.467	−58	126
−28	3.981	−59	112
−29	3.548	−60	100
−30	3.162	−∞	0

Table 2

1	2	3	4	5	6
0	100.000			99.972	0
		29.206	29.200		
−3	70.794		(27k+2k2)	70.772	−3.0
		20.676	20.600		
−6	50.118		(15k+5k6)	50.172	−6.0
		14.637	14.700		
−9	35.481		(10k+4k7)	35.472	−9.0
		10.362	10.390		
−12	25.119		(10k+390Ω)	25.082	−12.0
		7.336	7.360		
−15	17.783		(6k8+560Ω)	17.722	−15.0
		5.194	5.170		
−18	12.589		(4k7+470Ω)	12.552	−18.0
		3.676	3.630		
−21	8.913		(3k3+330Ω)	8.922	−21.0
		2.603	2.620		
−24	6.310		(1k8+820Ω)	6.302	−24.0
		1.843	1.847		
−27	4.467		(1k8+47Ω)	4.455	−27.0
		1.305	1.300		
−30	3.162		(1k2+100Ω)	3.155	−30.0
		923	920		
−33	2.239		(820Ω+100Ω)	2.235	−33.0
		654	642		
−36	1.585		(560Ω+82Ω)	1.593	−36.0
		463	470		
−39	1.122		(470Ω)	1.123	−39.0
		328	330		
−42	794		(330Ω)	793	−42.0
		232	232		
−45	562		(220Ω+12Ω)	561	−45.0
		164	164		
−48	398		(82Ω+82Ω)	397	−48.0
		116	120		
−51	282		(120Ω)	277	−51.1
		82	82		
−54	200		(82Ω)	195	−54.2
		59	56		
−57	141		(56Ω)	139	−57.1
		41	39		
−60	100		(39Ω)	100	−60.0
		100	100		
−∞	0		(100Ω)	0	−∞

A reasonable choice of attenuation step is 3 dB. This gives sufficiently fine control, yet allows 60 dB of attenuation to be achieved in 21 steps. Allowing an extra step for the zero (infinite attenuation) position means that 22 ways are required in all.

The resistance values for a 22 position control are given in table 2. Column 1 lists the required attenuation in dB for each switch position. Column 2 lists the corresponding values of R_f. Column 3 lists the resistor values required between the switch positions. Column 4 lists the actual values used (made up from standard E24 series resistors). Column 5 lists the actual values of R_f obtained and column 6 lists the actual values of attenuation obtained using these resistor values.

Resistor values for values of R_t other than 100 k can be obtained simply by scaling the resistor values given. For example, for a 50 k control the values should all be halved, for a 10 k control they should be divided by 10 and so on.

One final point to note is that the switch contacts should be of the make-before-break type to avoid switching clicks as the control is operated.

real load resistors

When measuring and comparing the output powers of audio amplifiers (especially at the high end of the audio spectrum) it is useful to have available a 'real' load resistor, i.e. one which is a pure resistance with no parasitic inductance or capacitance. Carbon film resistors have a low self-inductance, but unfortunately are not commonly available in the high power ratings required for amplifier testing. The highest rating normally available in a carbon film resistor is 2 watts, so a load resistor for testing a 100 W amplifier would need to be made up of 50 such resistors in series/parallel combinations!

Wirewound resistors are available with high power ratings, but unfortunately such resistors are rarely wound so as to minimise self-inductance. A typical high-power wirewound resistor consists of a single layer of resistance wire wound helically on a cylindrical ceramic tube. This type of resistor has quite a high self-inductance, but since the usual applications of high-power wirewound resistors are DC or low-frequency AC this is not important.

1

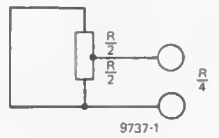

For use as an amplifier load resistor some means must be found of reducing the inductance of a wirewound resistor. This can be achieved by providing the resistor with a centre tap and connecting it as shown in figure 1. Current flows in opposite directions in each half of the resistor, so the magnetic fields produced in each half (and hence the self-inductances) tend to cancel out. If the original resistor has a value R then the connection shown has a resistance R/4 since it consists of two R/2 sections in parallel.

Resistors already provided with taps, such as television H.T. dropper resistors, are suitable for this application. Presettable resistors may also be used. These consist of an exposed wire element wound on a ceramic former, and are provided with contact clips that may be fixed anywhere along the length of the element. 1 kW electric fire (heating) elements (which have a resistance of around 60 Ω) may also be used.

In order to obtain a load resistor of the desired resistance and wattage rating, several wirewound resistors may be connected in series/parallel combinations in the normal way, provided each one is first connected as shown to minimise its inductance.

compander

'Compander' is a portmanteau word derived from 'compressor' and 'expander' and describes a device designed to increase the dynamic range and/or improve the signal-to-noise ratio of an audio transmission, or recording and reproduction chain. Until recently, companders were fairly complicated circuits. Now, however, they are available in the form of integrated circuits, one of which, the Exar XR 2216, is discussed in this article. This IC can be used in a variety of applications such as amateur radio, PA systems, transcription of recorded material from disc to tape etc.

The dynamic range of an audio signal is the ratio, expressed in decibels (dB), between the largest and smallest usable signal levels, i.e. between the loudest and softest sounds. 'Live' sound, from the softest whisper to the clatter of a pneumatic drill, can have a dynamic range in excess of 100 dB. However, it is not possible to capture such a large dynamic range in a recording, since the largest signal that can be recorded is limited by saturation of the recording medium, and the smallest usable signal is limited by the recording medium's own inherent noise, e.g. tape noise or record surface noise. The ratio between these two, i.e. the dynamic range, is only about 60 dB for the best disc recordings, and considerably less (around 45 dB) for cassette recordings.

One way round the problem is to compress the dynamic range of the original programme material before recording it, i.e. to pass the signal through a system whose gain reduces progressively as the signal level increases. Thus a 2 dB change in signal level at the input could be compressed, for example, into a 1 dB change in level at the compressor output. To recreate the original dynamic range the compressed recording is 'expanded' by replaying it through a system having the reciprocal transfer characteristic of the compressor, e.g. a circuit which gives a 2 dB change in output for a 1 dB change in input level.

Disc to cassette

The dynamic range of material recorded on disc is compressed into the 60 dB dynamic range of this recording medium, but discs are normally played back without expansion since a dynamic range of 60 dB is considered adequate for domestic listening. Quite recently, DBX have introduced a disc compression/expansion system, but any expander system will, of course, add to the cost of disc reproduction equipment.

Transcribing discs onto cassette tape using a deck already equipped with a noise reduction system (Dolby, ANRS) is no problem. However, there are many inexpensive cassette decks on the market that are not equipped with a noise reduction system, and the results obtained when discs are recorded using such a machine are likely to be disappointing, since the dynamic range is inadequate. Recordings made taking care not to overload the tape will have excessive background noise on quiet passages, while recordings made to give a reasonable noise level on quiet passages will exhibit distortion due to overloading on loud passages.

Normally, the only way to improve matters is to control the dynamic range of the programme material manually during recording, by 'riding' the recording level control. This can be very tedious if long passages are to be recorded, so a simple compander would be a useful addition to an inexpensive cassette machine.

The XR 2216

Until recently companders were fairly complex circuits, but fortunately a complete compander system is now available in the form of an integrated circuit from Exar – the XR 2216.

The equivalent circuit and functional block diagram of this IC are shown in figure 1. The device contains an AC/DC converter which converts the AC signal fed to it into a proportional DC control voltage, a voltage-controlled impedance converter (which functions as a voltage-controlled attenuator) and a high-gain operational amplifier.

Figure 2 shows the external components and circuit connections necessary to make the XR 2216 function as an expander. The input signal (from the tape deck, for example) is applied to pin 7, the input of the AC/DC converter, the output of which controls the transconductance of the impedance converter. The input signal is also fed to the impedance converter, the output of which is thus proportional to the product of the input signal and its average value from the AC/DC converter, i.e. the transfer function of the expander is a square law. The impedance converter output is fed to the operational amplifier by linking pins 11 and 16, and the expanded output signal is taken from pin 2.

By re-arranging the circuit slightly it can

Table 1. Electrical specification of the XR 2216.

Table 1

ELECTRICAL CHARACTERISTICS: V_C = +12 V, T_A = 25°C

COMPANDER

PARAMETERS	MIN.	TYP.	MAX.	UNITS	CONDITIONS
Power Supply Voltage	6		20	VDC	
Nominal Power Supply Voltage	12		18	VDC	
Power Supply Current, No Signal Input			3	mA	
Gain Change Over Frequency Tolerance	–1		+1	dB	300 ~ 3500 Hz
Distortion Measured at –4 dB* Input Level at 1 KHz		3		% THD	
Attack Time Measured at –10 dB Input Level			5	ms	To 90% of Final Value
Decay Time Measured at –10 dB Input Level			5	ms	To 10% of Final Value
Transfer Characteristics** Compander Output With Input Levels of:					
– 4 dB	3.5	+6	7.5	dB	
– 8 dB	–0.5	+2	3.5	dB	
–10 dB	–1.5	0	+1.5	dB	
–14 dB (reference)		–4		dB	
–24 dB	–15.5	–14	–12.5	dB	
–34 dB	–25.5	–24	–22.5	dB	
–44 dB	–36.5	–34	–32.5	dB	
–54 dB	–49	–44	–42.5	dB	
–64 dB	–59	–54	–52.5	dB	

COMPRESSOR

PARAMETERS	MIN.	TYP.	MAX.	UNITS	CONDITIONS
Input Impedance	50			k ohm	
Output Impedance			50	ohm	
Output Signal Level for –10 dB Input at 1 KHz		–10		dB	
Output Voltage Swing	0			dB	
Output Noise, Input AC Grounded			30	dBrnc	
Compressor Transfer Characteristics** Compressor Output With Input Levels of:					
– 4 dB		–7		dB	
– 8 dB		–9		dB	
–10 dB		–10		dB	
–14 dB (reference)		–12		dB	
–24 dB		–17		dB	
–34 dB		–22		dB	
–44 dB		–27		dB	
–54 dB		–32		dB	
–64 dB		–37		dB	

EXPANDER

PARAMETERS	MIN.	TYP.	MAX.	UNITS	CONDITIONS
Input Impedance	50			k ohm	
Output Impedance			50	ohm	
Output Signal Level for –10 dB		0		dB	
Output Voltage Swing	+8			dB	
Output Noise Input AC Grounded			+5	dBrnc	
Expander Transfer Characteristics** Expander Input Levels Required for Output of:					
+ 6 dB		–7		dB	
+ 2 dB		–9		dB	
0 dB		–10		dB	
– 4 dB (reference)		–12		dB	
–14 dB		–17		dB	
–24 dB		–22		dB	
–34 dB		–27		dB	
–44 dB		–32		dB	
–55 dB		–37		dB	

Notes: * 0 dB = 0.775 Vrms (1 mW across 600 ohm load) ** Recommended transfer characteristics.

1

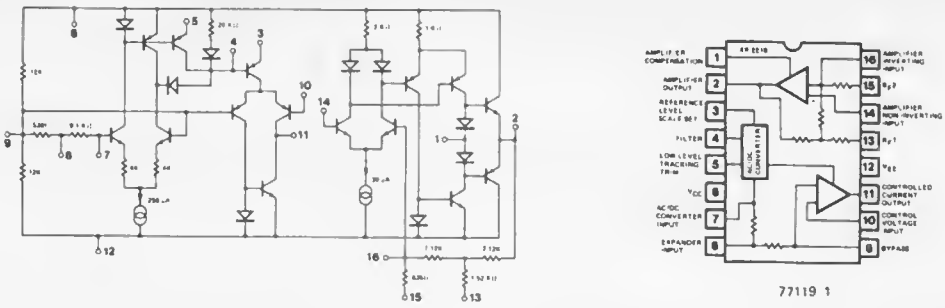

Figure 1. Internal circuit and functional block diagram of the XR 2216 compander IC.

2

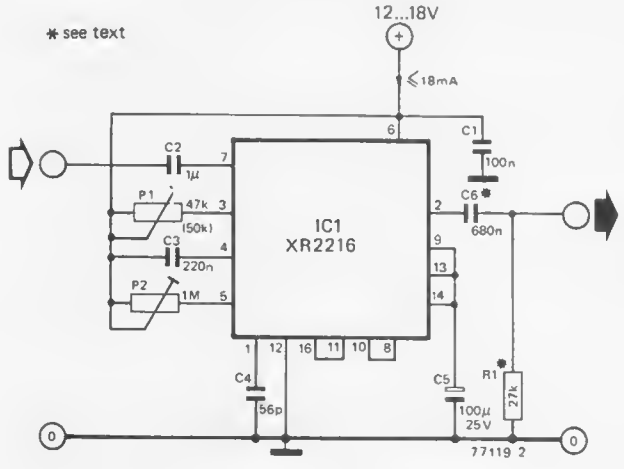

Figure 2. Connections and external components required for operation of the IC as an expander.

3

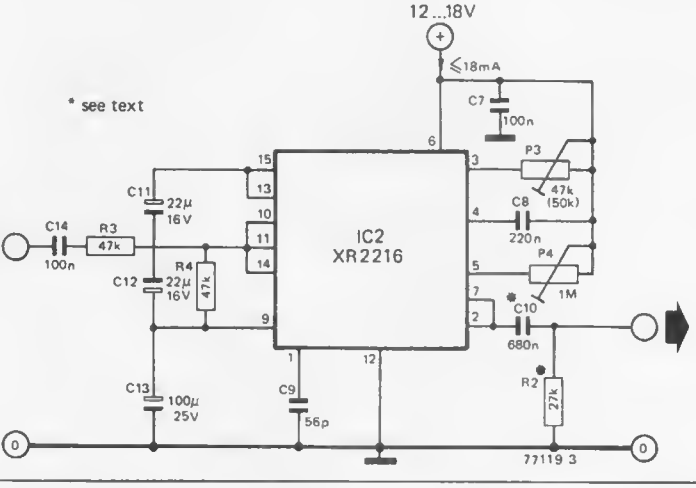

Figure 3. Connection of the XR 2216 as e compressor.

Figure 4. Typical performance curves of the XR 2216:
4a. Compressor output error versus signal amplitude.
4b. Expander input error versus output signal amplitude.
4c. Compander tracking error versus input signal amplitude.

be made to function as a compressor, the circuit of which is shown in figure 3. In this case the input signal is fed to the input of the impedance converter (pin 10) and from the output of this stage to the input of the operational amplifier, the output (to the tape deck) again being taken from pin 2. A portion of the output signal is fed to the input of the AC/DC converter, (by linking pins 2 and 7), the output of which again controls the transconductance of the impedance converter. In this case the output is thus proportional to the square root of the input signal, i.e. the transfer function is the reciprocal of the expander circuit's.

The attack and decay times of the circuit are equal and are determined by a filter consisting of an external resistor and capacitor (P1/C3 or P3/C8). It is important that the attack time should not be too long, otherwise the response of the circuits to transients may be too slow to prevent overload.

On the other hand, if the decay time is too short then ripple may appear on the output of the AC/DC converter at low input frequencies, thus leading to modulation of the output signal and third-harmonic distortion. This is not a problem in a compander system, since the distortions produced in the compression and expansion processes tend to cancel out. However, if the circuit is used simply as a compressor or as an expander then distortion at low frequencies is a major problem.

Two preset adjustments are provided in the circuits of figures 2 and 3. P1 and P3 set the reference level of the circuit, which determines the actual input voltage range over which the compression/expansion takes place. P2 and P4 set the low level tracking, which ensures that the compression and expansion characteristics match, thus ensuring (amongst other things) minimum distortion.

Performance data

The specifications of the XR 2216 are given in table 1, and typical performance curves in figure 4. It can be seen that, in the compressor mode the circuit provides a 2 : 1 compression ratio, e.g. a 60 dB dynamic range can be compressed into 30 dB. In the expansion mode, not surprisingly, an expansion ratio of 1 : 2 is obtained, thus restoring the original dynamic range.

From table 1 it can be seen that distor-

4a

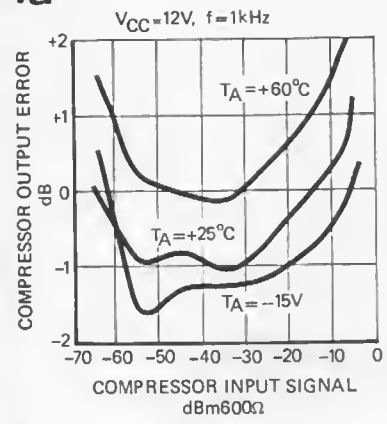

4b

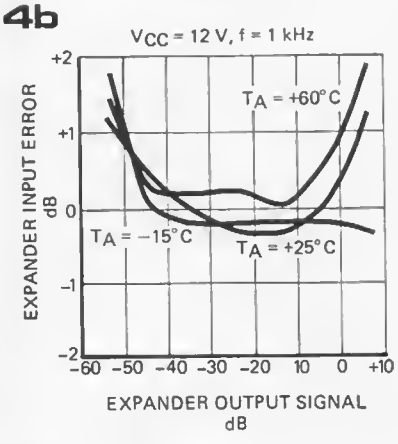

4c

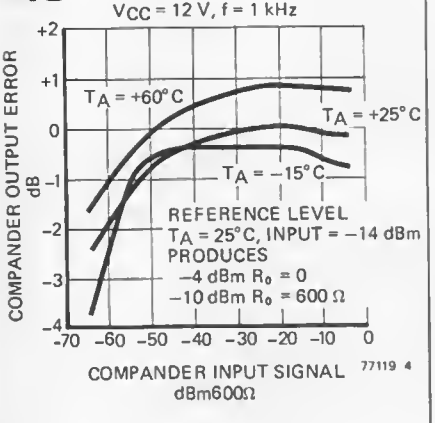

tion at 1 kHz is typically 3%. Whilst this may not seem particularly low it is certainly comparable with the distortion level of an inexpensive cassette recorder, and is more than adequate for non-hi-fi purposes.

It should be noted that the values of C6 and C10 shown on the circuit diagram were calculated for circuits having an input impedance of around 50 k. If the equipment being used with the compander has a lower input impedance, the values of these capacitors can be calculated by using the formula shown below:

$$C = \frac{10}{R} \qquad (\mu F, k\Omega)$$

R (in kΩ) being equal to the input impedance in parallel with R1 (or R2), and C being C6 or C10 (in μF).

stereo pan pot

When making a sound recording using multi-microphone techniques the signal picked up by each microphone can be correctly positioned in the stereo sound stage by 'panning'. For example, the signal from a centrally placed microphone would be fed equally to both left- and right channels, a signal from a microphone located at the left of the sound stage would be fed only to the left channel and a signal from a microphone located at the right would be fed only to the right channel. Signals from microphones located between these positions would be fed to the left- and right channels in the appropriate proportions.

A circuit which allows the position of the sound image from a particular microphone to be positioned is known as a panoramic potentiometer or pan pot and usually consists of a ganged log-antilog potentiometer. The input signal is fed to both halves of the potentiometer and the left- and right outputs are taken from the wipers. Turning the potentiometer to the right increases the right channel level and decreases the left channel level, and vice versa.

Operation of a pan pot must not vary the total signal level, i.e. if the output level from the left or right channel with the pan pot in its extreme left- or right position (other channel muted) is taken as 0 dB, then the signal level from each channel with the pan pot central must be −3 dB to keep the total signal constant.

Figure 1 shows the circuit of a pan pot which uses only a single, linear potentiometer. The input signal from, say, a microphone preamplifier is split into two channels. The resistor and potentiometer values are chosen such that, with P1 in the extreme left position (wiper towards R1') the gain of the left channel is 1.066 whilst the right input signal is shorted to ground via the wiper of P1. With P1 in the extreme righ position the reverse is true. With the wiper of P1 in its centre position the gain of both channels is 0.746. which is approximately 3 dB down on the gain in the extreme positions.

National Semiconductor appl.

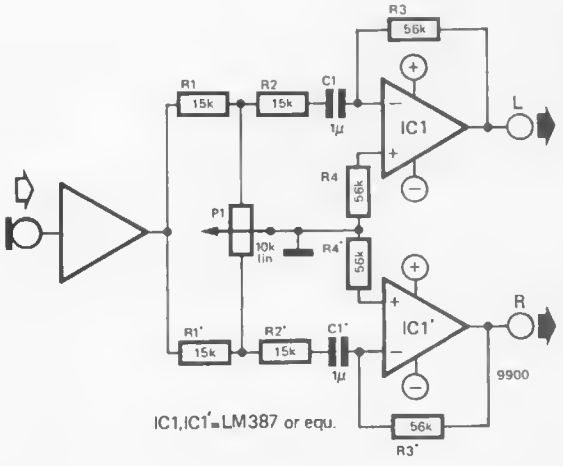

723 as a constant current source

The μA 723 precision voltage regulator IC is well known for its versatility, good line and load regulation, and low temperature coefficient. In addition to its many uses as a voltage regulator, it can also be used as a precision current regulator (constant current source).

Figure 1 shows a simplified internal circuit of the μA 723, equivalents for which are the LM 723 and TBA 281. It contains a temperature-compensated voltage reference, a differential amplifier, driver and output transistors and a current sense transistor for current limiting purposes. A temperature-compensated reference voltage of 7.15 V +/− 5% is available at pin 4 (metal can version) or pin 6 (DIL package version). Familiarity with this internal circuit will aid in understanding the operation of the 723 as a constant-current source, which is shown in figure 2.

The differential amplifier is connected as a voltage-follower, with the output V_O fed directly back to the inverting input. A potential divider, R2/R3, connected across the reference voltage output, feeds a voltage of about 2.2 V to the non-inverting input. Since the differential amplifier is connected as a voltage follower, 2.2 V appears at output V_O. This causes a constant current

$$I = \frac{2.2}{R_1}$$

to flow through R1. Since this current flows from the positive supply rail into the V_C pin, it must also flow through the external load R_L. This current is constant, irrespective of the value of R_L, within certain limits. The maximum value of R_L is given by:

$$R_L = \frac{U_b - 2.2}{I} \qquad (\Omega, V, A).$$

Although the maximum output current capability of the 723 is 150 mA, care must also be taken not to exceed the 800 mW maximum dissipation of the IC. Maximum dissipation occurs when R_L is zero, since almost all the supply voltage is then dropped across the output transistor of the IC. The dissipation is given by:

$$P = (U_b - 2.2) \times I \qquad (W, V, A).$$

Rearranging this equation and substituting 0.8 W as the maximum dissipation, the maximum current that can safely be supplied (into a short-circuit) is

$$I_{max} = \frac{0.8}{U_b - 2.2} \qquad (A, W, V).$$

With a 10 V supply this is approximately 100 mA, and with the maximum supply (37 V) it will be approximately 23 mA.

The 723 may be provided with a thermal shutdown facility to protect against overheating. This is achieved by using the current limit transistor in the IC as a temperature sensor. At 30°C the base-emitter 'knee' voltage of this transistor is about 0.65 V, but at 120°C it has fallen to about 0.5 V. Resistors R4 and R5 (shown dotted) apply approximately 0.5 V to the base of this transistor (note also the dotted connection to the C_S terminal). This is normally less than the base-emitter knee voltage and is insufficient to turn on the transistor, but at 120°C, when the knee voltage has dropped to 0.5 V, the transistor will start to turn on. This will reduce the base drive to the IC's output stage, decreasing the output current and hence the dissipation.

If a larger output current is required than can be provided by the μA 723, an external power transistor may be added, as shown in figures 3 and 4. If an NPN transistor is used then it is simply connected as an extension of the emitter-followers in the IC's own output stage: base to V_O, emitter to the inverting input of the differential amplifier. However, if a PNP transistor is used a slight

1

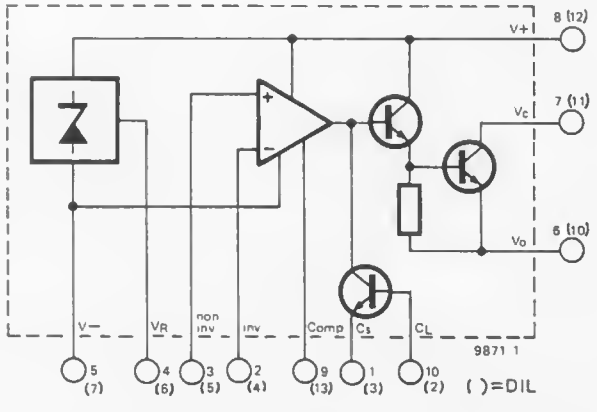

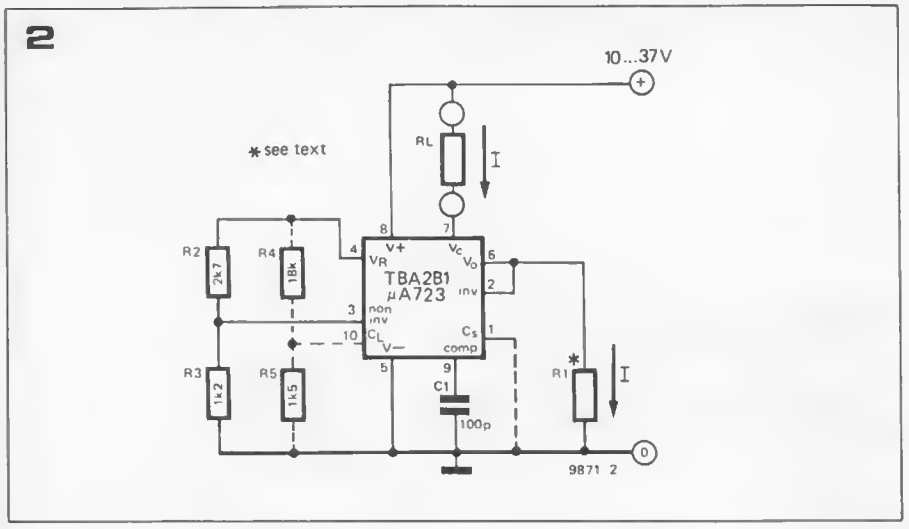

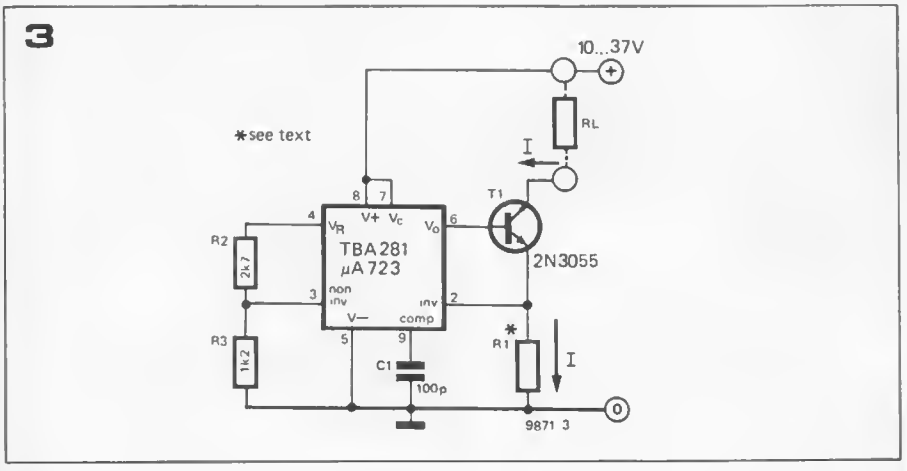

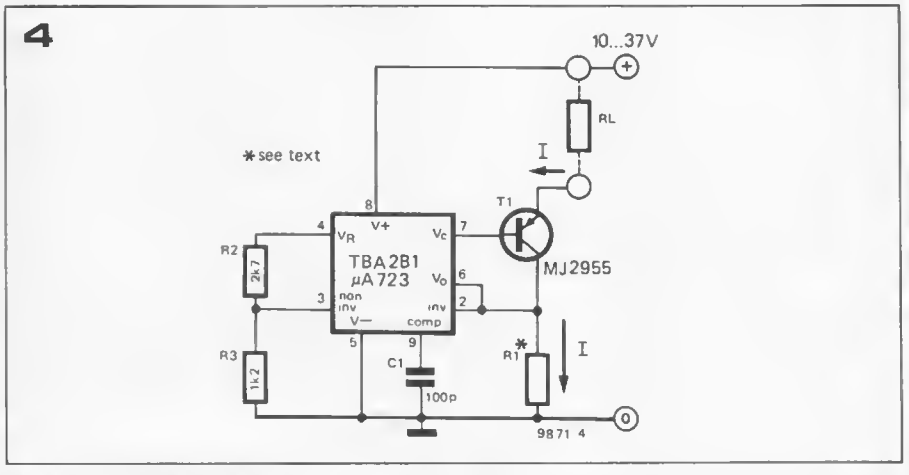

Figure 1. Simplified internal circuit of the 723 IC regulator. Numbers in parentheses are pinout of the DIL package version; others, pinout of the TO-metal can version.

Figure 2. The 723 used as a constant current source.

Figures 3 end 4. If e larger output current is required than can be provided by the 723 alone, an external NPN or PNP power transistor may be added.

rearrangement of the circuit is necessary: V_O and the inverting input are linked, and the base of the transistor is connected to V_C, the collector of the IC's output transistor. The equation previously given for calculating the output current also holds for these two circuits.

The thermal shutdown facility may also be added to these circuits, but it should be emphasised that it will protect only the IC, not the external transistor. As the dissipation in the external transistor may be quite high it is essential to provide it with a substantial heatsink. For example, with a 37 V supply and a current of 1 A, the short-circuit dissipation in the external transistor will be about 35 W!

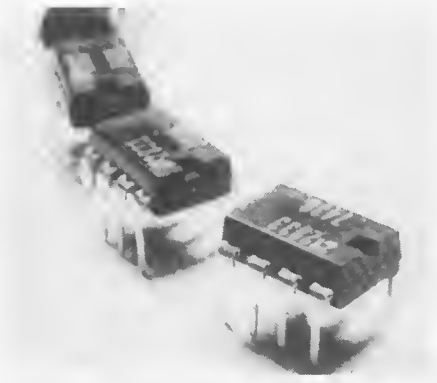

digital reverb unit

satellite antenna

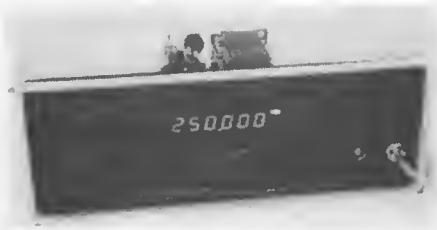

frequency counters

AND

colour modulator

mini shortwave receiver

universal logic tester

percolator switch

traffic lights

etcetera etc.

cassette-interface

Low cost, high transmission rate and complete reliability were the design requirements for the cassette interface described in the following article. The interface makes very few demands on the sound quality of the recorder, and can transfer data at a rate of up to 1200 Baud.

In contrast to some microprocessors, the SC/MP possesses serial input and output ports, so that all parallel-serial and serial-parallel conversion can be effected by software control. The necessary software routines, which ensure that data is read serially into and out of memory, are already contained in Elbug, the monitor software for the Elektor SC/MP system, and were discussed in the previous article in the series. This month we concentrate upon the hardware needed to convert the serial digital information into an analogue signal suitable for storage on tape.
There are several different systems for encoding digital information into a form suitable for recording. The most common of these, and the one employed in this circuit, is the CUTS format. CUTS is the acronym for Computer Users Tape System, and is sometimes also called the Kansas City Standard. In addition to specifying the number of control bits and the transmission speed (300 Baud), it defines that a logic '1' be encoded as eight cycles of a 2,400 Hz audio tone, whilst a logic 'Ø' be recorded as four cycles of 1,200 Hz. These frequencies were deliberately chosen as being suitable for use with all types of tape recorder.

Cassette encoder/decoder

The encoder/decoder consists of an FSK modulator (FSK = Frequency Shift Keying) and an FSK demodulator. When a logic '1' is present at the input, the modulator outputs a sinewave with a frequency of 2,400 Hz. If the input signal is at logic 'Ø', the frequency of the output signal shifts to 1,200 Hz. The modulator output is fed direct to the cassette recorder input.
When the recorder is playing back an encoded programme, the output of the recorder is fed to the FSK demodulator, which will output a logic '1' if the frequency of the input signal is 2,400 Hz, or a logic 'Ø' if the frequency is 1,200 Hz. The demodulator output is connected to the serial input of the SC/MP, and a software routine ensures that the serial stream of data is converted back into parallel form.
The speed of transmission is controlled by the software, and not by the interface hardware. Several different transmission rates are possible (see Elektor 35) and without any adjustments the interface can be used at speeds up to 1200 Baud.
Transmission rates higher than this are not possible with the above frequencies, however it is debatable whether they are in fact desirable, since with a speed of 1,200 Baud it would only take approx. 10 minutes to record a programme of 64 k bytes (i.e. the entire memory capacity of the SC/MP).

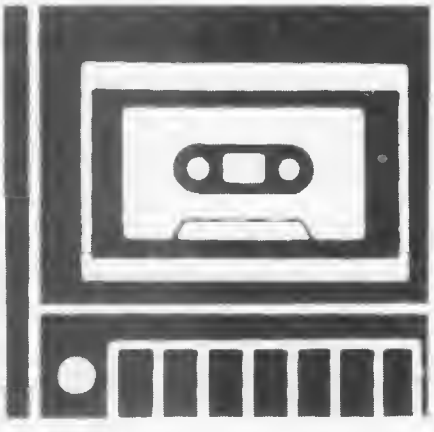

FSK modulator

The FSK modulator uses a well-known IC function generator, the XR-2206 (see figure 2). The IC is powered by the two supply voltages already present in the SC/MP system, i.e. + 5 V and − 12 V. Transistor T1 is included so that the IC can be driven by TTL logic levels.
The input and output signals of the modulator are shown in figures 5a and 5b, respectively. The amplitude of the output signal can be varied by means of P3, and hence adjusted to suit the input sensitivity of the particular tape recorder being used. The frequency of the output signal can be set to 1,200 Hz and 2,400 Hz by means of P1 and P2 respectively. This can be done either by using a frequency meter, or if that is not possible, by utilising the SC/MP clock generator.

Tuning the modulator

Since the SC/MP has an internal crystal clock generator, it is possible, with the aid of a short programme, to get it to generate signals whose frequency is remarkably constant. Table 1 shows the listing for such a programme. Once it has been loaded into memory and run, a squarewave signal with a frequency of either 1,200 Hz or 2,400 Hz is available at Flag Ø (pin 14C of the connector bus). The actual frequency of the signal

1

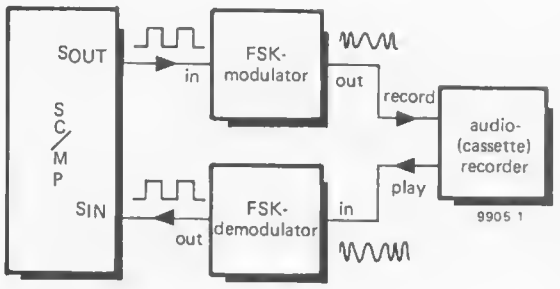

Figure 1. Block diagram of the cassette interface.

Figure 2. Circuit diagram of the FSK modulator.

Figure 3. Simple circuit for tuning the modulator.

Table 1. Listing of the programme to tune the modulator.

2

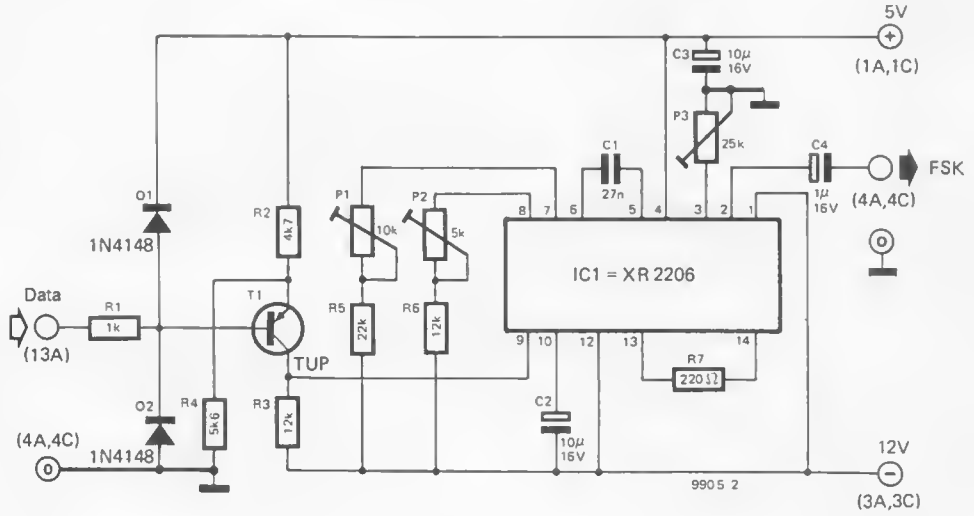

3

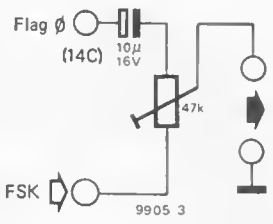

Table 1

```
                START = 0C00
0C00  C401  LDI 01
0C02  07    CAS        ; Set Flag 0
0C03  08    NOP
0C04  C4XX  LDI XX
0C06  8F00  DLY 00     ; Delay
0C08  C400  LDI 00
0C0A  07    CAS        ; Reset Flag 0
0C0B  C4YY  LDI YY
0C0D  8F00  DLY 00     ; Delay
0C0F  90EF  JMP        ; Jump start
```

$f_0 \approx 1200$ Hz XX = 52 YY = 4F
$f_1 \approx 2400$ Hz XX = 1E YY = 1B

depends upon the 'number' written into 'XX' and 'YY' (see table 1).
These signals can then be used to tune the modulator as follows:

- Flag Ø and the modulator output are connected as shown in figure 3. A high impedance earphone or a tape recorder with input level meter is then connected to the output of the above circuit.
- The programme for the 1,200 Hz tone is started, and a logic 'Ø' is presented to the modulator input (potentiometer P3 is set for maximum amplitude). Several different frequencies should now be audible in the earphone, namely the 1,200 Hz signal produced by the SC/MP, the tone produced by the modulator and the difference- or beat signal.
- P1 is adjusted until the beat signal frequency is reduced to a minimum, when the frequency of the modulator output should be virtually the same as that of the programme signal. If using a VU-meter then P1 is adjusted until the needle ceases to jitter.

The procedure for the 2,400 Hz signal is exactly the same, except that the SC/MP is programmed to produce a 2,400 Hz signal and a logic '1' is applied to the modulator input.

FSK demodulator

The circuit for the demodulator is considerably more complicated than that for the modulator. The complete circuit diagram of the FSK demodulator is shown in figure 4. Its operation differs from the conventional method of FSK demodulation (PLL), but the series of voltage waveforms shown in figure 5 should help to simplify its explanation.
The FSK signal (figure 5b) is fed to the

4

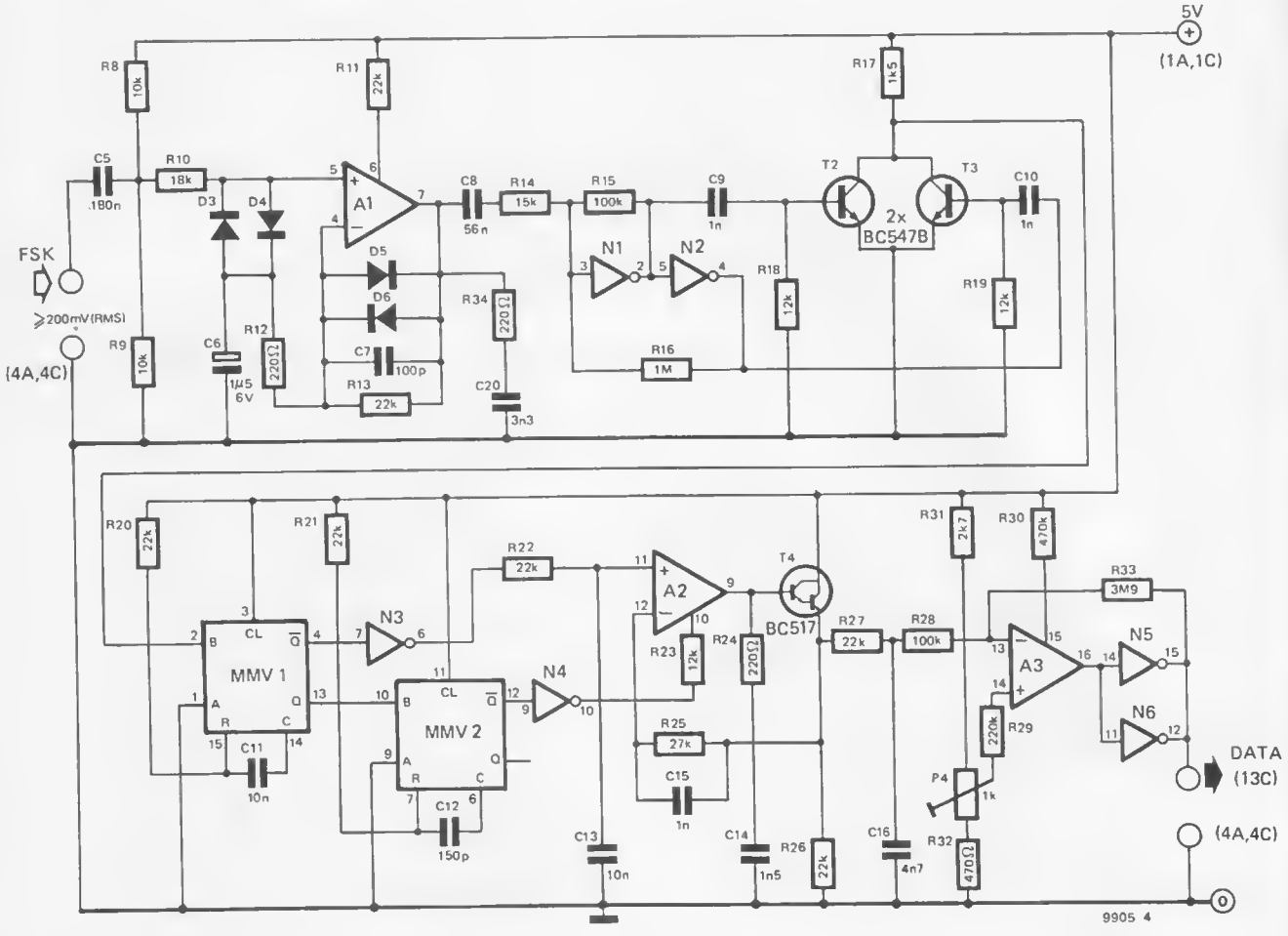

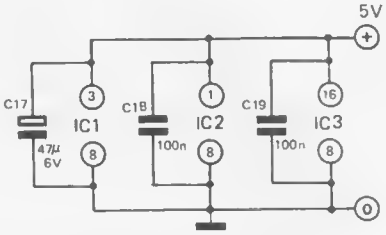

D3 . . . D6 = 1N4148
A1 . . . A3 = IC2 = CA 3060
N1 . . . N6 = IC3 = 4049
MMV 1, MMV 2 = IC4 = 74123

input of de demodulator, where it is clipped symmetrically by the limiter amplifier A1 (figure 5c) before being fed to a Schmitt trigger (N1, N2). The output of the trigger and its inverted form are each fed to a differentiating network (C9, R18 and C10, R19). The result is that a signal which has twice the frequency of the original input signal of the Schmitt-trigger is present at the collectors of T2 and T3 (see figure 5d). This signal is then used to gate a monostable multivibrator (M1). The output of the monostable is a train of pulses of constant width (figure 5e). These pulses are fed to an integrating network (R22, C13), producing the signal shown in figure 5f.

The voltage across capacitor C13 (figure 5f) can be used to monitor the frequency of the input signal, since the increase in charge per unit of time is twice as great in the case of the higher frequency (2,400 Hz) than in the case of the lower frequency (1,200 Hz). In order to convert this small difference in the DC component of the voltage across C13 into a digital signal, a sample-and-hold circuit (A2, T4 and C14) is used as a memory. A sample-pulse is derived from the output of M1 by means of a second monostable (M2). During this sample-pulse (figure 5g) the sample-and-hold circuit samples and then stores the instantaneous value of the voltage across C13. If the frequency of the demodulator input signal is constant, then the voltage at the output of the sample-and-hold circuit (= emitter of T4) will also be virtually constant. If the frequency of the input signal varies, then at the moment of sampling, the instantaneous value of the voltage across C13, and hence the output voltage of the sample-and-hold (figure 5h) will also vary.

Figure 4. The circuit diegrem of the FSK demoduletor.

Figure 5. Diagrem of the various voltage waveforms at different points in the demodulator circuit.

Teble 2. Programme for tuning the demodulator.

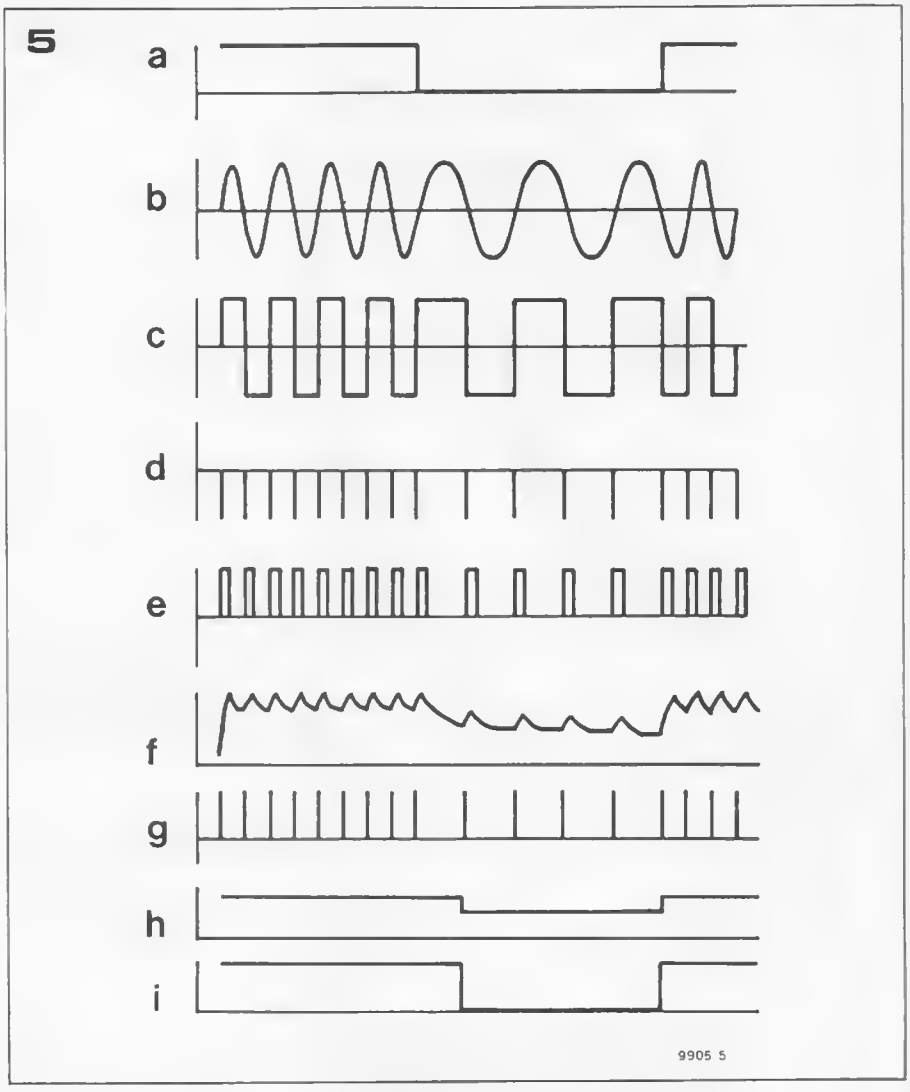

Although this output voltage is in fact a digital signal, its amplitude and logic voltage swing are not very large, and hence a comparator (A3 and N5, N6) is required to bring the signal up to TTL-logic levels. The threshold voltage of this comparator in fact represents the only adjustment point in the entire demodulator, and once again a simple programme will prove useful.

Tuning the demodulator

If the demodulator is fed a 'symmetrical'

Teble 2.

```
          START = 0C00
0C00  C404    LDI 04
0C02  C833    ST 33        ; count 2400 Hz
0C04  C401    LDI 01       ; periods
0C06  07      CAS          ; Set Flag 01
0C07  08      NOP
0C08  C41E    LDI 1E
0C0A  8F00    DLY 00       ; Delay
0C0C  C400    LDI 00
0C0E  07      CAS          ; Reset Flag 0
0C0F  C402    LDI 02
0C11  8F00    DLY 00       ; Delay
0C13  8822    DLD          ; count periods
0C15  9804    JZ
0C17  F000    ADD 00       ; Timing correction 0
0C19  90E9    JMP
0C1B  C402    LDI 02
0C1D  C819    ST 19        ; count 1200 Hz
0C1F  C401    LDI 01       ; periods
0C21  07      CAS          ; Set Flag 0
0C22  08      NOP
0C23  C452    LDI 52
0C25  8F00    DLY 00       ; Delay
0C27  C400    LDI 00
0C29  07      CAS          ; Reset Flag 0
0C2A  C436    LDI 36
0C2C  8F00    DLY 00       ; Delay
0C2E  B808    DLD
0C30  98CE    JZ
0C32  F000    ADD 00
0C34  90E9    JMP
0C36  00      00           ; 2400 Hz counter — byte
0C37  00      00           ; 1200 Hz counter — byte
```

6

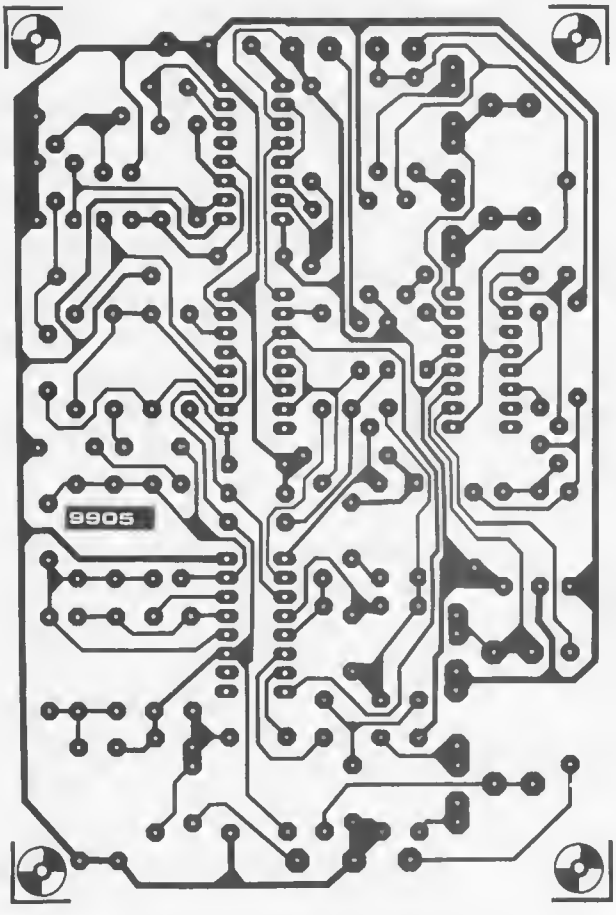

7

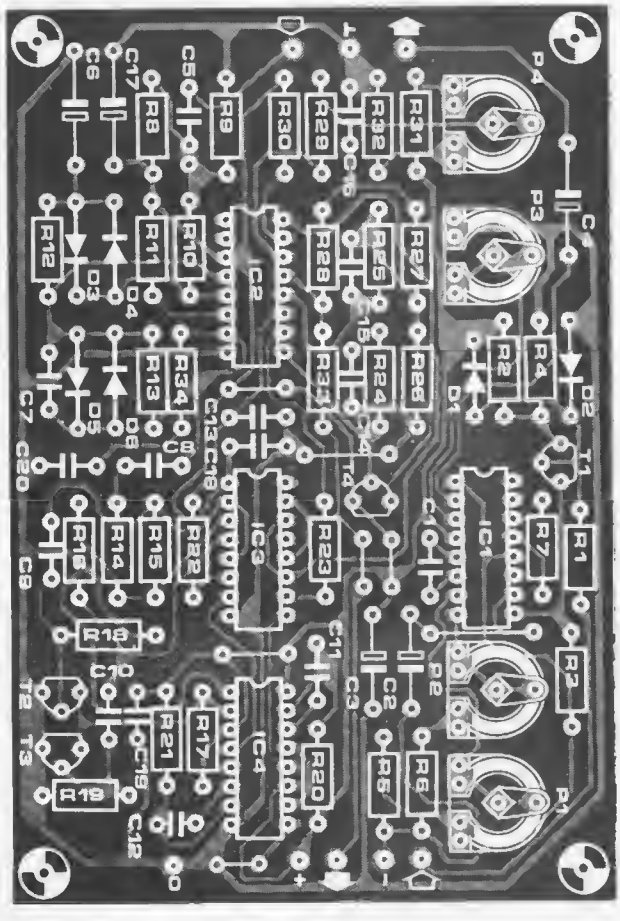

Parts list to figures 6 and 7

Resistors:

R1 = 1 k
R2 = 4k7
R3,R6,R18,R19,R23 = 12 k
R4 = 5k6
R5,R11,R13,R20,R21,R22, R26,R27 = 22 k
R7,R12,R24,R34 = 220 Ω
R8,R9 = 10 k
R10 = 18 k
R14 = 15 k
R15,R28 = 100 k
R16 = 1 M
R17 = 1k5
R25 = 27 k
R29 = 220 k
R30 = 470 k
R31 = 2k7
R32 = 470 Ω
R33 = 3M9
P1 = 10 k
P2 = 5 k
P3 = 25 k
P4 = 1 k

Capacitors:

C1 = 27 n
C2,C3 = 10 µ/16 V
C4 = 1 µ/16 V
C5 = 180 n
C6 = 1µ5/6 V
C7 = 100 p
C8 = 56 n
C9,C10,C15 = 1 n
C11,C13 = 10 n
C12 = 150 p
C14 = 1n5
C16 = 4n7
C17 = 47 µ/6 V
C18,C19 = 100 n
C20 = 3n3

Semiconductors:

D1 . . . . D6 = 1 N4148
T1 = BC 557, TUP
T2,T3 = BC 547 TUN
T4 = BC 517
IC1 = XR-2206
IC2 = CA 3060
IC3 = 4049 (CD 4049, etc.)
IC4 = 74123

Figure 6. Track pattern of the interface board (EPS 9905).

Figure 7. Component layout of the interface board.

Figure 8. Wiring diagram for the connections between the SC/MP system (bus board) and the cassette interface.

8

9905 8

input signal, i.e. a signal consisting of equal-lengthed portions of 2,400 Hz and 1,200 Hz, then the output signal must also be symmetrical. Table 2 lists a programme which will generate a symmetrical input signal for the demodulator. This signal is available at Flag Ø of the SC/MP and hence the demodulator input should be connected to this point (connector pin 14C).

The output signal is adjusted by means of P4. Since a symmetrical signal which swings between supply and earth has an average value which is equal to half supply, the demodulator output should be connected to a DC voltmeter and P4 adjusted until a reading of 2.5 V is obtained. That completes the adjustment procedure for the demodulator.

Printed Circuit Board

A printed circuit board was designed to accommodate both the modulator- and demodulator circuit. Figures 6 and 7 show the track layout and component overlay of the board. Once the components have been mounted and both circuits correctly adjusted, the board can be connected to the SC/MP system as shown in figure 8. ◀

car rip-off protection

Thefts from cars of valuable accessories such as spotlamps and foglamps are on the increase. Equipped with a spanner, and given a few minutes undisturbed, the enterprising felon can frequently make a haul worth over £100. The inexpensive alarm circuit described in this article will protect these valuable items, and can also be used to prevent the theft of accessories from inside the car, for example radios and cassette players.

W. Braun

The complete circuit of the alarm is shown in figure 1. N1 to N4 form a 5-input OR gate, but the number of inputs can easily be increased by adding extra gates. When the car is unoccupied (and the ignition is switched off) R11 holds the inputs of N5 low, so the output is high. The inputs of N1 to N4 are held low via the filaments of the lamps, etc. that are being protected. The output of N4 is thus low, the output of N6 is high, T1 is turned on, T2 is turned off and relay Re.1 is de-energised.

In the event of an accessory being disconnected by a thief (for example, the lamp connected to input E1), then the appropriate input to the OR gate will be pulled high by the 10 k input resistor. The output of N4 then goes high, the output of N6 goes low, T1 is turned off and T2 is turned on, energising Re.1 and sounding the car horn.

When the ignition switch is closed the output of N5 is low, which holds the output of N6 permanently high, thus disabling the alarm. This prevents the alarm from sounding when one of the accessories is switched on. Of course, the alarm will still sound if an accessory is switched on whilst the ignition is switched off. This prevents spotlamps and foglamps from accidentally being left on whilst the car is unoccupied. Alternatively, these accessories can be wired via the ignition switch so that this cannot occur.

An additional bonus is that the alarm will also sound in the event of a lamp filament failure. However, since a replacement lamp may not always be available, a secret 'cancel' switch (S1) is required . . .

Accessories inside the car, such as radios and cassette players, may also be protected by connecting a wire from one of the alarm inputs to the earthed case of the equipment. When the thief cuts this wire to remove the equipment then the alarm will sound. Of course, this facility should only be regarded as a backup to an alarm that prevents a thief entering the car in the first place!

Where lamps are wired in pairs the alarm will, of course, not sound until both have been disconnected. To overcome this disadvantage a diode of suitable current rating can be wired in series with each lamp, as shown in figure 2a. Since there is a 0.7 V voltage drop across a diode, a better idea would be to use a double-pole switch for the set of lamps being protected, as shown in figure 2b.

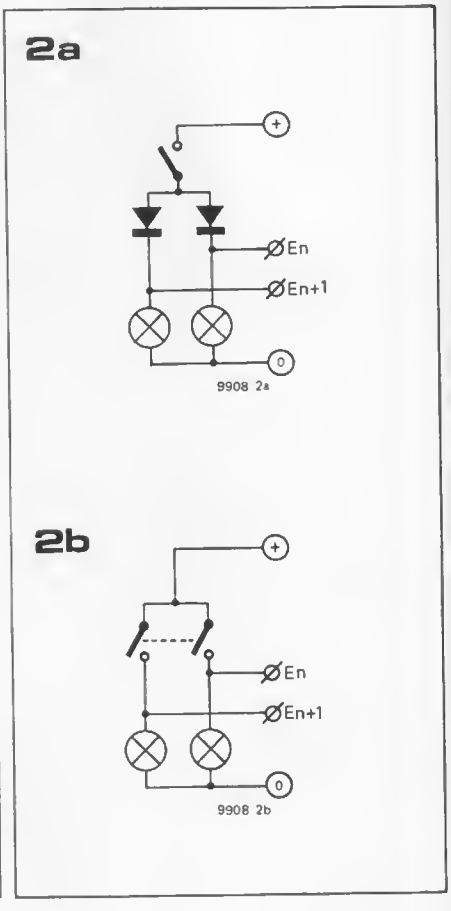

Figure 2. Lamps connected in pairs must be isolated from one another, otherwise the alarm will not give complete protection. This can be done with a pair of diodes, as shown in figure 2a, or by double-pole switching, as shown in figure 2b.

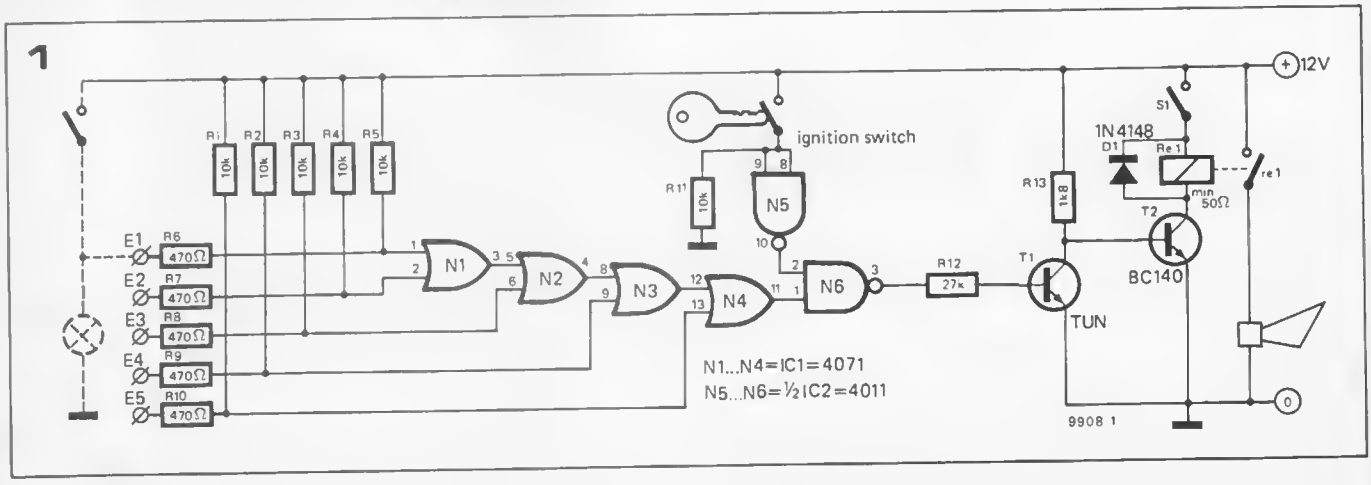

Figure 1. Complete circuit of the car rip-off theft alarm.

vocoders (1)

An orchestra suddenly begins to recite a passage of Shakespeare, an electric guitar reads the news, the voice of a talker unexpectedly changes sex, a single voice sounds like a chorus — these are just a few of the amazing effects which can be obtained with a new electronic instrument — the vocoder. This article explains the ins and outs of this fascinating new development in the field of electronic 'music'.

C. Chapman

A vocoder (VOice CODER) is an instrument designed to analyse and electronically recreate the sound of the human voice. Although vocoders are in fact a far from recent invention, and have been used for a number of years in such fields as telecommunications and data processing, it is only within the last couple of years that a serious attempt has been made to exploit their enormous potential for musical and sound effect applications.

History

The term 'vocoder' was first coined in 1936 by an American called Homer Dudley, who invented a machine to compress the bandwidth of speech for transmission purposes. There was also a certain amount of interest in vocoders in Germany during the thirties. This interest was stimulated by the realisation that they had an obvious military potential — the encoding of secret messages.

By the middle of the sixties Siemens possessed a vocoder which was occasionally used for recordings. Similarly the BBC Radiophonic Workshop, and a number of other experimental studios used vocoders for special effects on records, radio and television. However all these early prototypes suffered from the drawback of being extremely large and unwieldy, and as such were quite unsuited for other than specialised applications.

The real breakthrough came in 1975 with the appearance of a vocoder which, by virtue of its compact and ergonomical design, was suitable for use in a conventional studio situation where it could be interfaced with other equipment, thus allowing its full potential to be realised. This was the EMS (Electronic Music Studios) Vocoder (see photo 4) developed by Tim Orr, a self-contained portable instrument that can not only synthesise speech at constant and varying pitch, but by using a second non-speech input signal can encode literally any recorded sound with any speech sound. The machine can thus produce the effect of 'talking' musical instruments. Since the EMS Vocoder, Sennheiser have capitalised upon their experience of using vocoders in the field of telecommunications, and with the assistance of Heinz Funk of the Hamburg Radio Studio have brought out the Sennhciser Sound Effect Vocoder VSM 201 (see photo 5). The latest development is a smaller version of the EMS Vocoder, called the EMS 2000 (sce photo 6), which, by virtue of its size and extreme portability, is particularly suited for live work.

The author and editor wish to thank Mr. Orr of EMS Ltd., Mr. Buder of Sennheiser and Mr. Funk of the Hamburg Radio Studio for their assistance in the preparation of this article.

Speech-synthesis and Vocoding

As mentioned above, a fundamental feature of vocoders is their ability to analyse and electronically simulate the sound of speech. Thus before going on to examine the operating principles of a vocoder it is first necessary to take a look at the basic characteristics of human speech.

Speech sounds

At the moment it is virtually impossible to create a realistic replica of the human voice, since not only do speech sounds have a very irregular intensity, but they are also extremely rich in harmonics. Synthesised speech is always too 'clean', too free from natural imperfections.

Speech itself is composed of two main component sounds:

- Air from the lungs can be forced between the vocal chords situated in the windpipe, causing these chords to vibrate and a pulsating air-column to enter the mouth and nasal cavities. The fundamental frequency of the resultant note is determined by the length, thickness and tension of the vocal chords. Sounds produced in this fashion e.g. the vowels, are known as VOICED sounds.
- Alternatively, if the air from the lungs is not forced through the vocal chords, but simply expelled through the mouth, then so-called UNVOICED sounds are produced, such as 'f' or 'h'. These are basically similar to the type of sounds which can bc produced by a noise generator.

In the case of both voiced and unvoiced sounds the shape of the mouth and nasal cavities determines the character or timbre of the sounds. Variation of

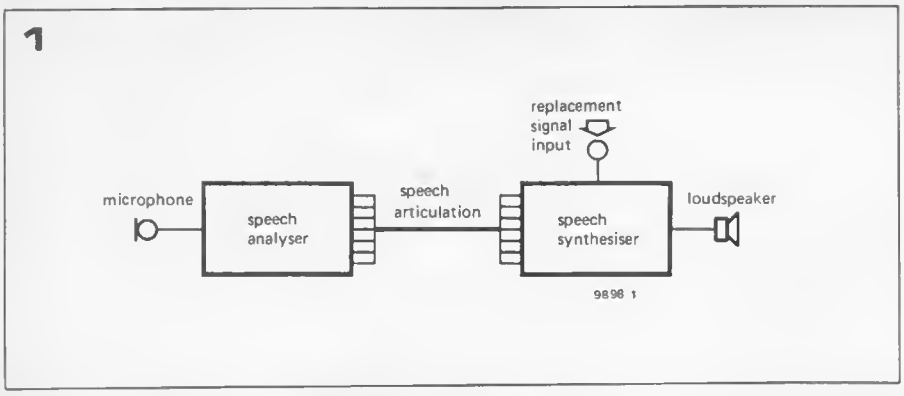

Figure 1. This simplified diagram shows the basic operating principle of all vocoders. The input speech signal is analysed to provide a set of data which is used to impose the pattern or articulation of the speech signal upon an external replacement signal input. The fact that the original speech sounds are encoded in the form of control voltages gives the vocoder its name (VOice CODER).

Figure 2. A spectrum analysis of the sound of vowels and consonants spoken by a female (figure 2a) and a male (figure 2b) voice. The pitch is the same for all the vowels. The fundamental frequency of the male voice is approx. 140 Hz, whilst that of the female voice is roughly 280 Hz. The sound produced by the vibration of the vocal chords is extremely rich in harmonics. The variation in the dynamic amplitude characteristics of different vowels is the result of the different resonances formed by varying the position of the tongue, teeth and lips, and hence the shape of the nasal and mouth cavities. This process, which amounts to a sophisticated 'filtering' of the speech sounds, is just as important in the case of unvoiced sounds. This is evident from the differences in the spectra of the two sounds 'f' and 'sh'.

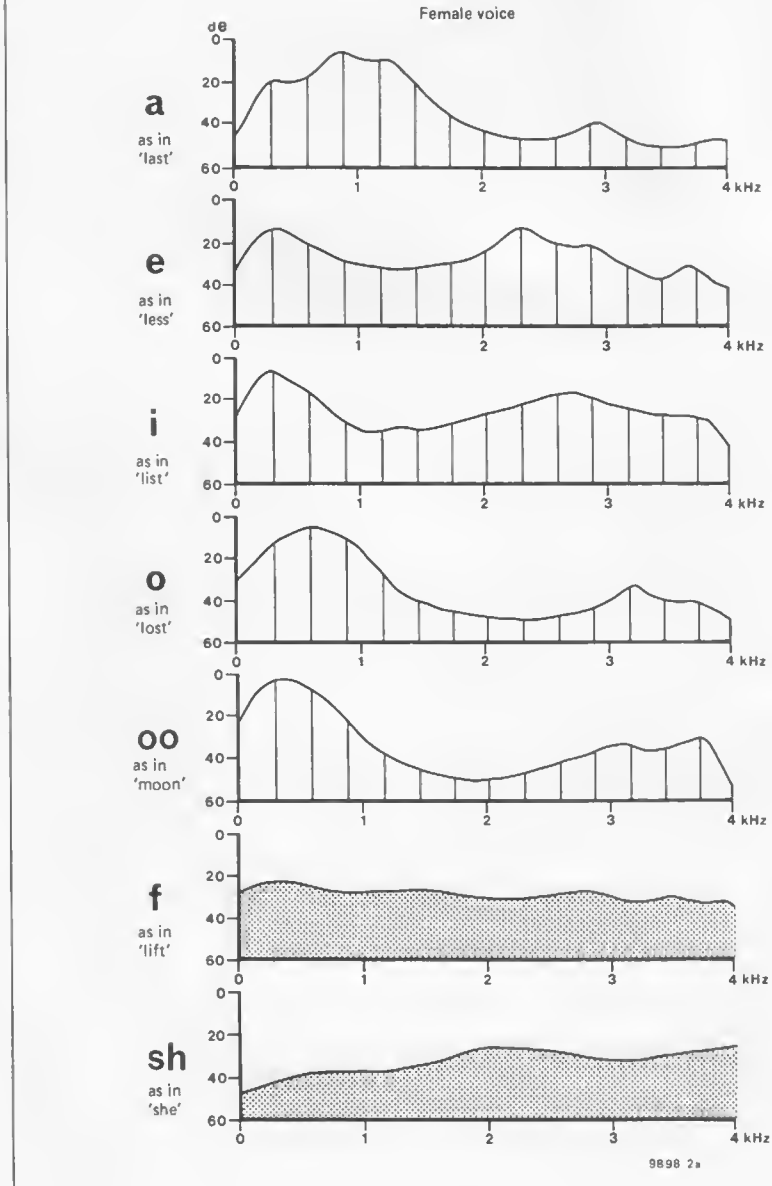

cavity RESONANCES by movement of the tongue and lips controls the harmonic content of the voice and enables us to form separate vowels and consonants (see figures 2a and 2b). The lips play a particularly important role in sounds which are distinguished by their dynamic amplitude characteristics, such as the percussive attack transient of the 'p' in 'paper'.

Thus the voice can be seen as a complex sound generating instrument, consisting of a frequency and amplitude-controlled oscillator (the vocal chords and lungs), a

noise generator (the lungs) and a set of tone filters (the mouth and nasal cavities).

Speech-synthesis

Viewing the voice in this way naturally leads one to speculate whether it might be possible to synthesise speech, using techniques similar to those employed in a music synthesiser. The vocal chords could be replaced by an oscillator, the output waveform of which is sufficiently rich in higher harmonics to allow differentiated filtering, whilst a noise generator could be used to provide the unvoiced sounds. A switching circuit would cut back and forth between the above two sound sources depending upon which mode of voice was required.

However problems begin to arise when one considers the type of filters that would be needed for a speech synthesiser of this type. Since the continual variation of both the static harmonic content and dynamic characteristics of the sound is crucial for the formulation of articulate speech, an equaliser-type filter system would be necessary to simulate all the nuances in the tonal character of human speech. What is more, the filter system would have to be voltage controlled if it were to have any chance of matching the rapid change in the harmonic content of speech. At this point it becomes clear that an analogue speech-synthesiser of this kind would require an enormous amount of hardware, for how does one generate the extremely complex pattern of voltages needed to control the filter bank?

One possibility to simplify the process is a hybrid system, using a memory to store the control voltages. The quality of modern speech-synthesisers which use such a system is fairly good. Doubtless many readers will have seen or heard of so-called 'talking' computers, which use synthetically-generated speech to express the results of their calculations, and the 'talking' calculator shown in photo 1 proves that it does not require an enormous amount of hardware to synthesise speech digitally. Photo 2 shows that the digital speech-synthesiser consists of just two ICs mounted on a single board. The speech components are stored digitally in a ROM, where they can be scanned by a speech synthesiser micro-controller. A D/A converter in the micro-controller then generates the analogue speech components, from their digital equivalents.

Vocoding

Although storing the speech components digitally represents by far and away the simplest solution for systems designed to *generate* speech (assuming the desired vocabulary is not too large), this is not the case with vocoders, and here we come to the basic difference between vocoders and speech-synthesisers.

A vocoder is basically designed to superimpose the pattern of spoken words onto a recorded non-speech signal (such as, music, the sound of wind, surf, etc.) so that the resultant effect is that of a talking orchestra, for instance. The articulation of the output signal is extremely good, being distinguished by remarkable clarity and distinctiveness. This quality of articulation, among other things, is what distinguishes the vocoder from other less sophisticated special effect devices such as the well-known WAWA pedal, or the more recent MOUTH BAG or MOUTH TUBE (see photo 3).

The latter is basically a crude acoustic-mechanical vocoder. The signal from an electric guitar or similar source is fed to a powerful amplifier, which drives a loudspeaker situated in a closed box. The amplified sound from the guitar is then fed via a plastic tube to the mouth of the musician. Without using his vocal chords, but simply by altering the shape of his mouth cavity he can then articulate the guitar signal, so that the guitar

2b

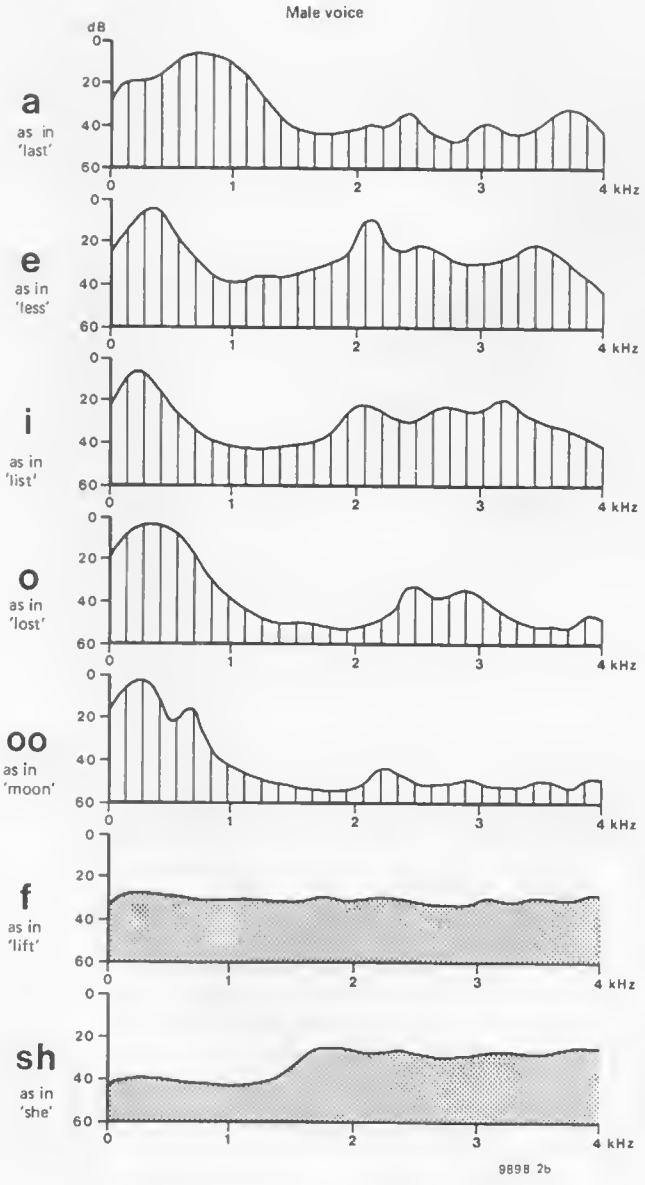

1

2

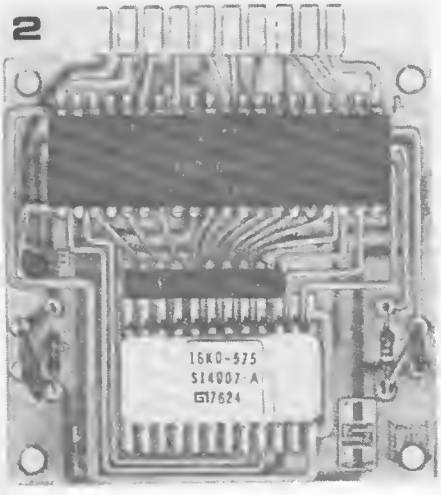

3

appears to be 'talking'. This signal is picked up by a microphone in front of the musician's mouth and fed through the PA system in the usual fashion. The sounds produced by the mouth tube are essentially similar to those produced by a vocoder.

However, not only is the mouth tube fairly limited in the number of possible applications, but, compared with vocoders, the quality of articulation is considerably inferior. In particular, it is extremely difficult to produce unvoiced and plosive sounds.

Modern Vocoders

By now the reader should have gained a good idea of the basic principles of vocoding: the vocoder modulates the articulation of speech upon a second 'excitation' signal. This is done by converting the input speech signal into data which can be used to vary the output signal.

Although in principle there are various different ways of analysing and synthesising speech, the three vocoders described above are all 'channel vocoders'.

Figure 3 shows the functional block diagram of this type of vocoder. The speech signal (from the microphone) is fed to a bank of bandpass filters, which split the signal into a number of separate and very narrow frequency bands. By rectifying and feeding these signals through lowpass filters, a series of DC voltages which match the envelope of the filter output signals can be obtained. These are in fact the control voltages which will control the synthesiser filter bank, and represent a real

3

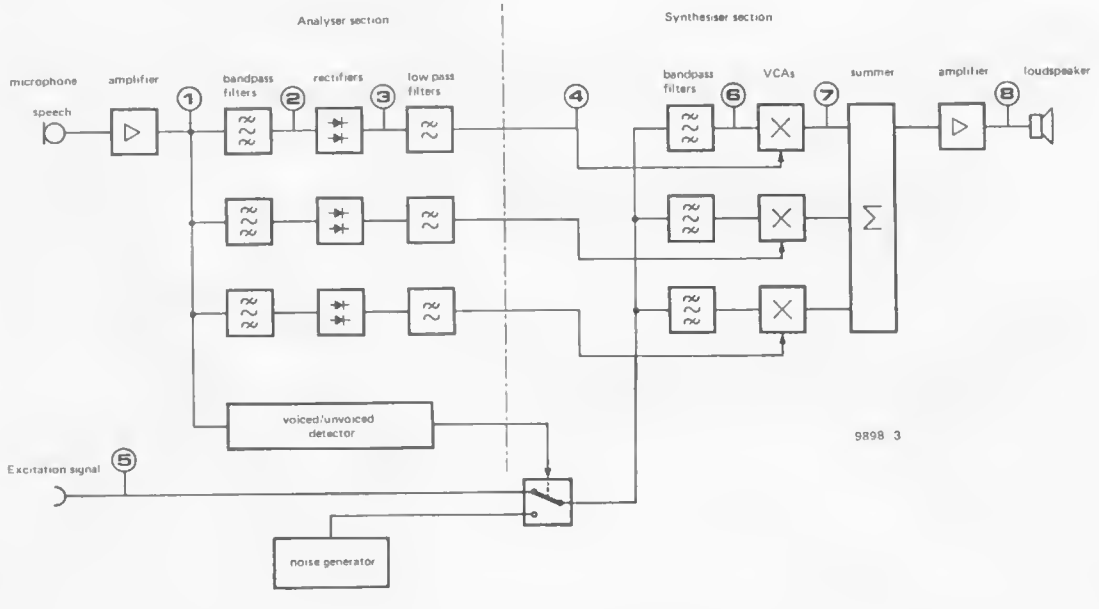

Figure 3. Functional block diagram of a channel vocoder. All vocoders which are intended for musical and special effect applications conform to this design. A real time spectrum analysis is made of the speech signal by a bank of bandpass filters and envelope followers. The result of the analysis is a series of control voltages which drive a bank of VCAs (voltage controlled amplifiers), to vary the replacement signal. Thus the spectrum of the original speech signal is imposed upon the 'excitation' (normally non-speech) signal. The voiced/unvoiced detector continuously samples the speech signal and decides whether, at any given moment, the noise generator need be switched into circuit. The noise generator is required since most excitation signals do not have a sufficiently broad spectrum to allow the synthesis of sibilants. For the sake of simplicity only three channels are shown in the diagram.

Photo 1. Approximately 2 years ago a 'talking' calculator, which contained a very small speech synthesiser, appeared on the market.

Photo 2. The printed circuit board of the speech synthesiser inside the 'talking' calculator. The circuit consists of only two ICs; a ROM which stores the speech components in digital form, and a micro-controller which selects the components for any desired word and, by means of a D/A converter, fits them together to form an analogue speech signal.

Photo 3. An example of a mouth tube or mouth bag. The box contains a power amplifier and loudspeaker. The resultant sound is fed via the plastic tube into the mouth of the musician who then modulates or 'articulates' this signal by changing the shape of his nasal and mouth cavities. Thus he appears to make his guitar, or whatever instrument he is playing, speak or sing.

Photo 4. The full-size EMS vocoder was the first commercially available vocoder which was specially designed for musical or special effect applications in the recording studio. The instrument contains several additional features such as a pitch extractor (pitch-voltage converter) and two synthesiser VCOs which can be played on external keyboards.

4

time spectrum analysis of the speech signal.

The input speech signal is also fed to a second circuit, the voiced/unvoiced detector. This continuously samples the speech signal to decide whether it is a voiced or unvoiced sound, and indicates the result by switching to one of two voltage levels (e.g. 0 V and +5 V).

The outputs of the voiced/unvoiced detector and the envelope followers control the synthesiser section of the vocoder. This contains the same number of filters as the analyser section, so that the excitation signal (be it simply the synthesiser oscillators and noise generator, or these two sound sources plus an external input) is analysed into the same number of separate frequency bands as the speech signal. Via a series of voltage controlled amplifiers, the outputs of the filter sections are then varied by the control voltages derived from the envelope followers, with the result that the spectrum of the speech signal is imposed upon the excitation signal.

The separate channels are summed and fed to the output stage. The resultant signal possesses the 'voice' of the excitation signal (e.g. a violin), but has the articulation of the passage of speech.

Furthermore, both the typical character of the excitation signal as well as all the nuances of articulation in the speech signal (dialect, emphasis etc.) are completely preserved. That is to say, the human voice is simply replaced by that of whatever instrument is used for the excitation signal.

In theory, therefore the voiced/unvoiced detector should be superfluous, however most excitation signals do not have a sufficiently wide dynamic spectrum to synthesise the sound of sibilants ('s', 'h', etc.). For this reason the voiced/unvoiced detector ensures that the noise generator provides the synthesiser section with the appropriate 'raw material' whenever the excitation signal cannot do so.

Photos 7a and 7b show examples of typical signals which appear at the test points numbered in figure 3. The progression of signals in photo 7a illustrates how the input speech signal is converted in the analyser section into the control voltages which command the VCAs. Photo 7b shows how the output signal is synthesised, using a pulse generator as the excitation signal.

The second part of this article will contain a more detailed description of

5

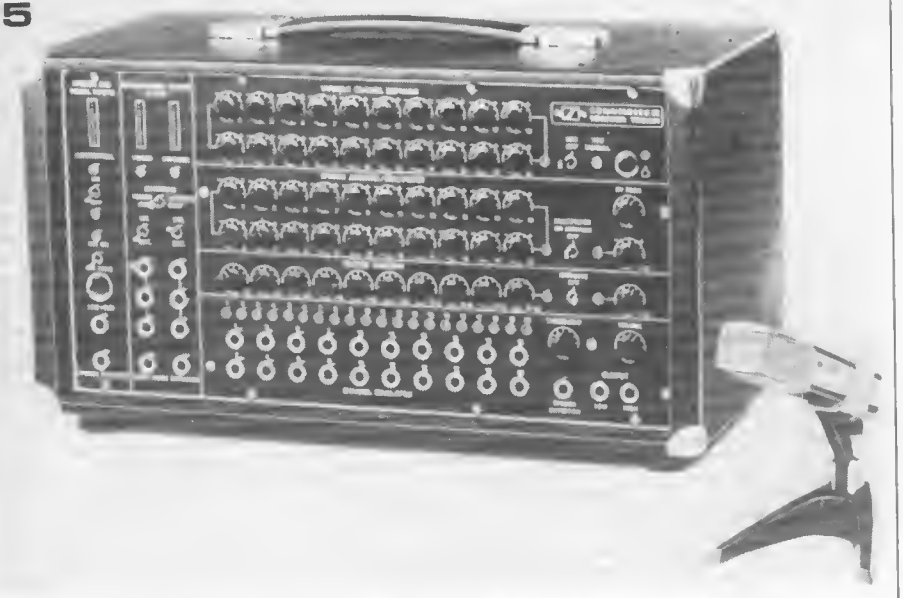

Photo 5. The Sennheiser Sound Effect Vocoder VSM 201. This vocoder was designed specifically for use in the studio, and can be incorporated as a module into Moog studio synthesisers.

Photo 6. The 'mini' EMS vocoder; its size, price and extreme portability make it ideally suited for live stage work.

Photo 7. These photos show the type of signals which typically appear at the points numbered in figure 3.

① Microphone (speech) signal. The trace is that of the vowel 'a' in the test word 'bast'.
② The output signal of a filter channel in the analyser section (centre frequency 680 Hz, 6 dB bandwidth 140 Hz).
③ The signal after rectification.
④ The control voltage obtained after the rectified signal has been 'smoothed' by the lowpass filters.
⑤ The excitation signal from a pulse generator. The frequency is approximately 150 Hz.
⑥ This signal is obtained after the pulse signal has been fed through the synthesiser filters.
⑦ This is the signal which is obtained once the output signal of the analyser section ④ has been modulated onto the output of the synthesiser filters.
⑧ The final output signal of the vocoder is obtained by summing all the outputs of the synthesiser channels. The similarity of this signal with that of the original speech signal can be clearly seen.

how a vocoder works, and will also take a look at the various applications of vocoders.

References:
Figures 1, 2 and 3, photos 5, and 7: Sennheiser-Electronic, Wedemark, Hannover, West Germany.
Photos 1 and 2: Silicon Systems Inc., Irvine, California
Photo 3: Electro-Harmonix, New York
Photos 4 and 6: EMS, London ◼

6

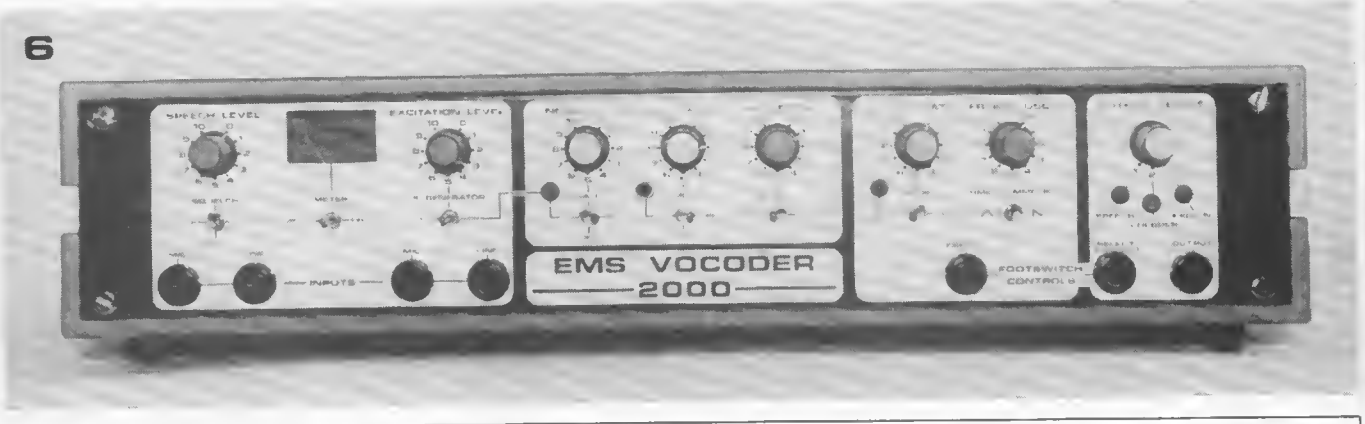

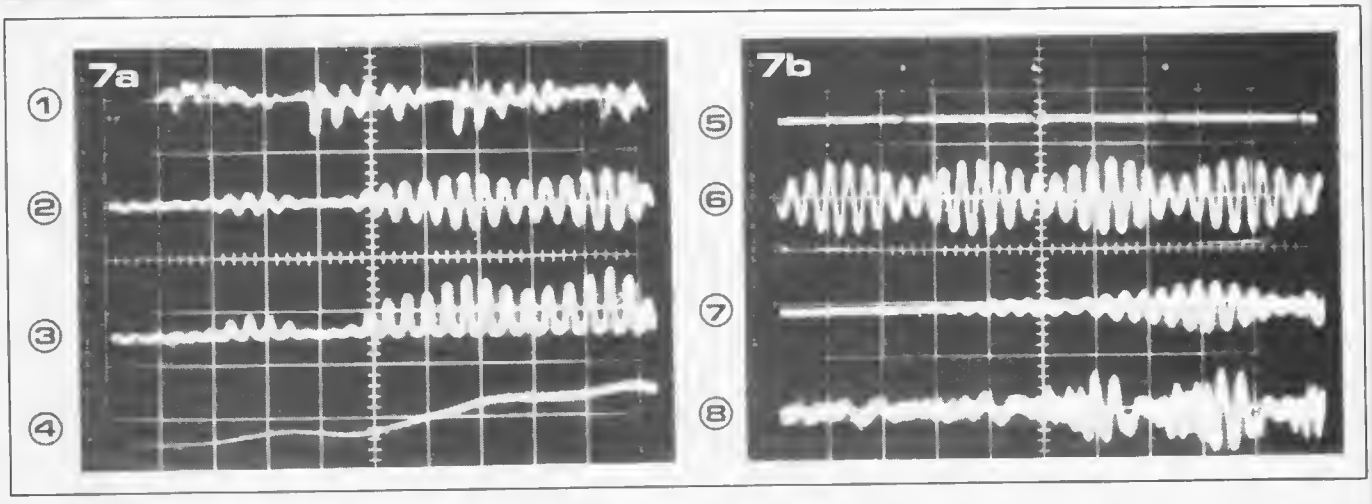

formant
the elektor music synthesiser (10)

This final part of the Formant series completes the description of the synthesiser by describing the COM (control and output module) and by giving an overall wiring diagram. Possibilities for further expansion of the system are also discussed.

C. Chapman

The COM contains a tone control amplifier with bass, middle, treble and volume controls, and an output buffer capable of driving high impedance (> 600 Ω) headphones for monitoring or practice purposes. The COM front panel also contains the indicator LEDs for the three power supply voltages and the gate signal. These indicators should not be regarded merely as a gimmick but as an important aid to monitoring the state of the Formant system. A fault in any of the supply voltages is immediately indicated by one of the LEDs, as is the absence of a gate pulse.

COM circuit

The complete circuit of the COM is given in figure 1a.

The input signal is fed to a volume control P1a and thence to an 'anti-plop' filter built around A1. This is a 12 dB/octave highpass filter with a break frequency of around 20 Hz. It suppresses low-frequency transients and rolls off the bass response of the system to reduce 'listener fatigue' which can be caused by the low bass notes of electronic music, especially with full bass boost. By rolling off the bass response the filter also helps protect the bass drivers of the loudspeakers against excessive, very low-frequency signals. Indeed, if the synthesiser is to be used with small 'bookshelf' speakers it may be advisable to raise the turnover point of the filter to 40 Hz by changing the value of R1 and R2 to 39 k.

The treble and bass controls, built around A2, are a conventional Baxandall network. To avoid the middle control interacting with the bass and treble controls it is constructed separately around A3. The output of A3 then feeds into a second volume control P1b. The use of a ganged volume control on a single signal channel may seem a little unusual, but it does have several advantages. A volume control at the input to the COM prevents any possibility of overloading A1, whatever the signal level. On the other hand, the provision of a volume control later in the circuit allows a better signal-to-noise ratio to be maintained at low settings of the volume control, since noise (principally from A1) is attenuated along with the signal as the control is turned down. The fact that this control produces a 'double logarithmic' characteristic does not cause any inconvenience in operation.

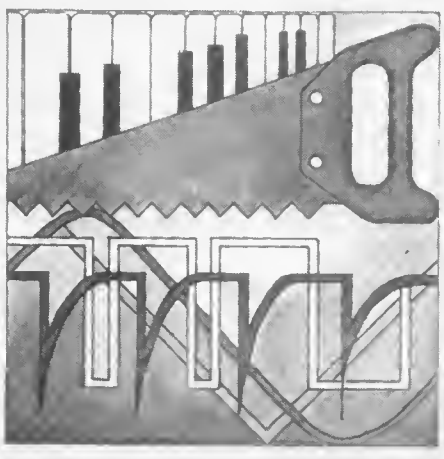

No power amplifier is built into the COM as the heat generated in the output stage could cause temperature drift problems in other circuits in the system. However, the COM is provided with an internal output to a separate power amplifier, IOS. The output of the amplifier may then be brought back through the COM via the PA input connection on the COM board edge connector to a socket on the COM front panel (OUT 2). The COM output is itself also brought out to a socket on the front panel (OUT 1) into which high impedance headphones may be plugged. Note that a 6.3 mm jack socket is used for OUT 2. The four indicator LEDs also receive their power via the COM edge connector from the appropriate circuits, and are also mounted on the COM front panel.

Construction and testing of the COM

A printed circuit board and component layout for the COM are given in figure 2, a front panel design is given in figure 3 and wiring to front panel mounted components is shown in figure 4. Screened leads should be used for the connections to bass, middle and treble potentiometers B, M, and T.

Some readers may not wish to bring the output of a power amplifier back through the COM to output 2, since this may not be convenient especially if the synthesiser is to be used with, say, an existing hi-fi setup. In this case two options are open. Output sockets 1 and 2 can simply be connected in parallel or alternatively output socket 2 can be wired direct to input 1S to provide an output signal unaffected by the tone and volume controls.

It is not intended to provide a design for an output power amplifier since several good designs have already been published in Elektor. However, a few hints on the mounting of such an amplifier will not go amiss. As mentioned earlier,

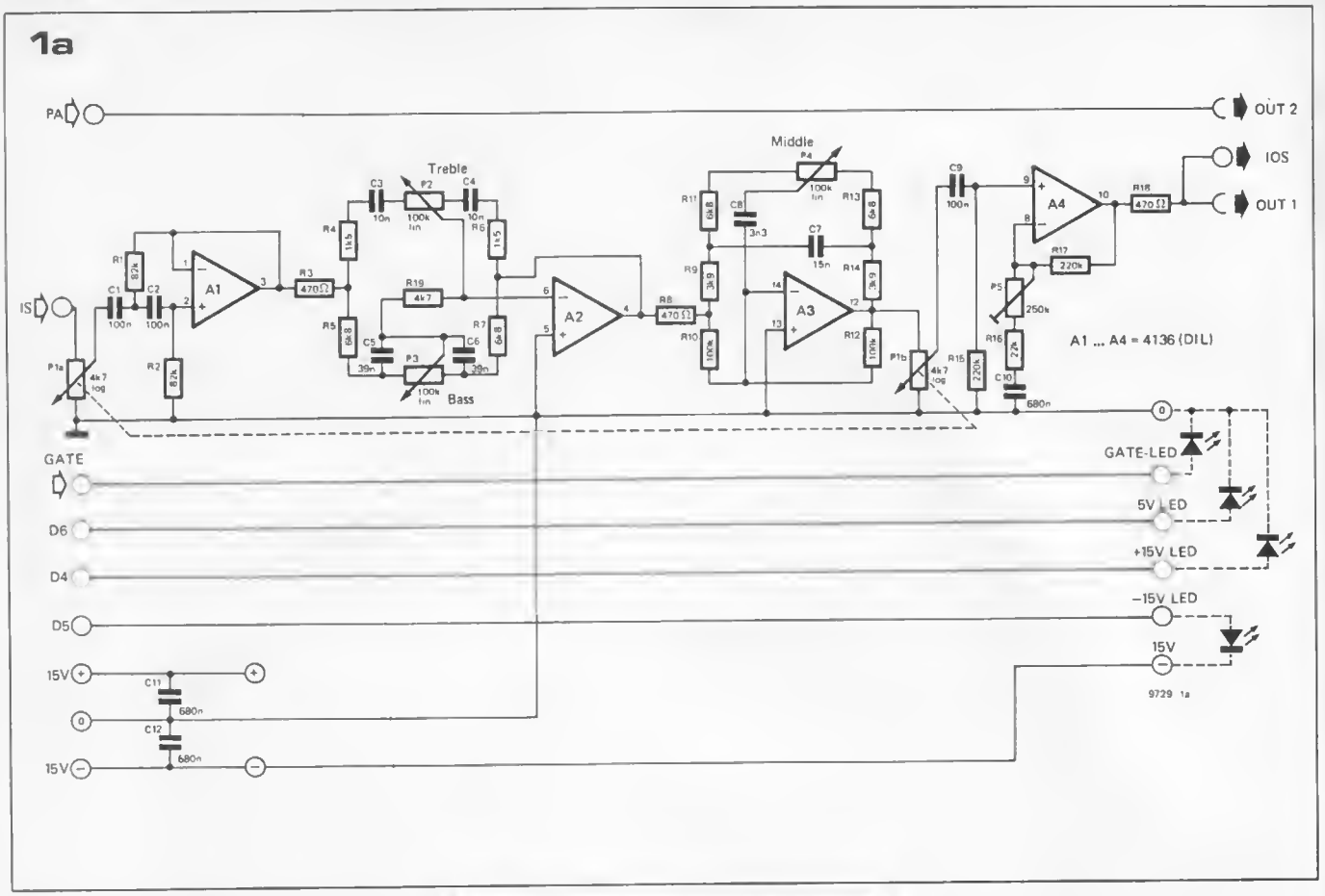

the power amplifier should not be mounted in a plug-in module since it may then cause thermal problems. It should preferably be mounted at the back of the module cabinet with the output transistors mounted on heatsinks whose fins are external to the module housing. The Formant power supply is not intended to supply current for a power amplifier, so a separate power supply will be required. The mains transformer should be mounted as far away as possible from the Formant modules to reduce hum pickup (the same applies to the Formant mains transformer).

The COM can be tested by feeding in a signal from one of the VCOs and monitoring it on an oscilloscope to check that the waveform is undistorted. The gain of the COM output stage, A4, can be varied between about 1.8 and 11 by means of P5. This preset should be adjusted so that full drive of the headphones or power amplifier is obtained with the volume control turned fully up (clockwise).

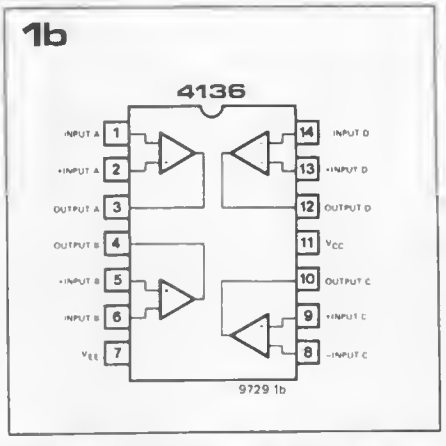

Figure 1a. Circuit diagram of the COM, which consists of a tone control/headphone amplifier and indicator LEDs for gate pulse and the three power supply voltages.

Figure 1b. Pinout of the 4136 IC.

Figure 2. Printed circuit board and component layout of the COM (EPS 9729—1).

Complete wiring diagram

The interwiring between modules for the basic Formant system is given in figure 5, but readers wishing to build a more extensive system can expand this as required.

For clarity the supply wiring is not shown, but the wiring method already mentioned must be adhered to, i.e. each module should have separate supply leads from its socket back to the 'star' connection points (busbars) on the power supply module. The temptation to simplify the wiring by simply linking between the supply pins of the modules should be avoided as this will cause interaction between modules.

The 'Noise' and 'LFOs' modules are not shown in figure 5, since the supply wiring is the only connection to these modules.

Again for clarity, the full pinout of each module edge connector is not shown, but the connections are shown in the correct sequence working down from the top edge of each module.

One small modification is required to the interface receiver p.c. board in order that the gate LED can be wired with only a single link. R30 on the interface receiver board is mounted in the space provided for D4 as shown in figure 6. A single wire is then connected from the lower pad to which R30 was originally connected to the appropriate pin of the COM socket. Without this modification two leads would have to be brought out to D4.

Patchcords

Due to the hardwired interconnections between modules, Formant is perfectly playable without any of the front panel patching sockets being used. However, for effects such as vibrato and tremolo, patchcords are used to connect the outputs of the LFO module to the VCOs or VCA. These are very easy to make. A

2

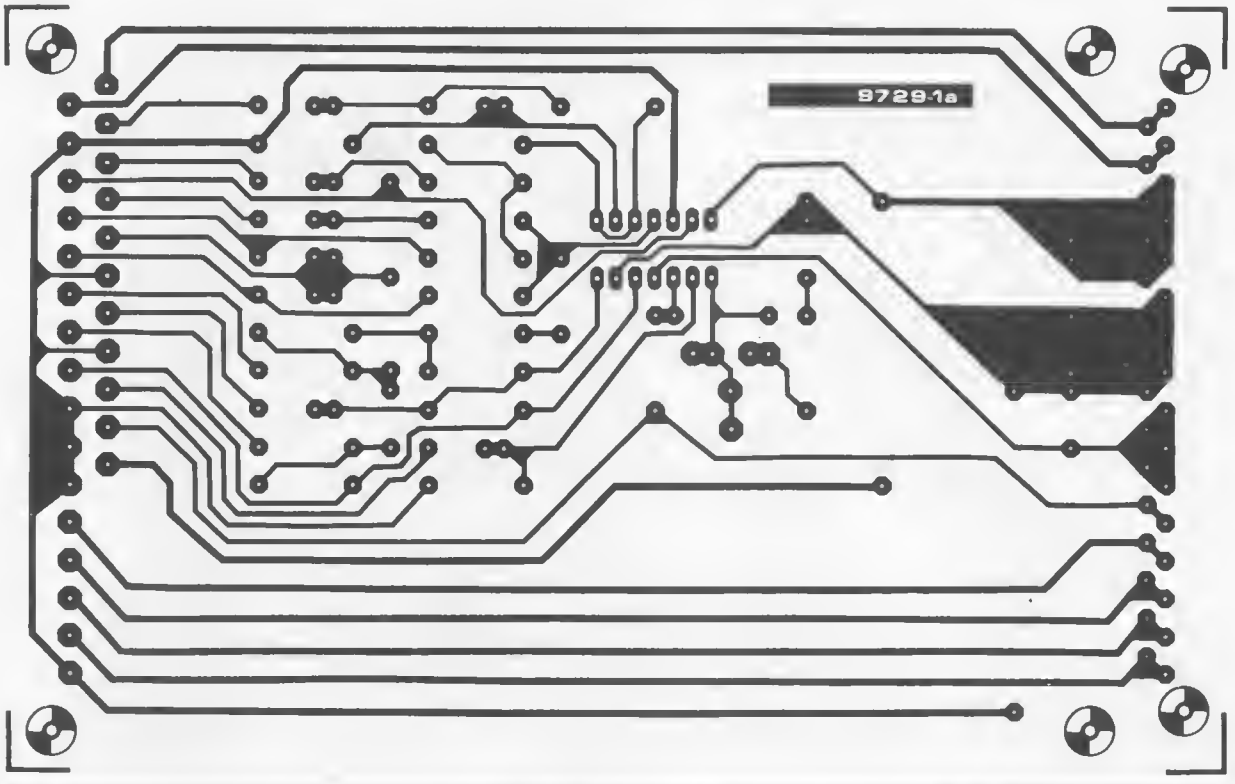

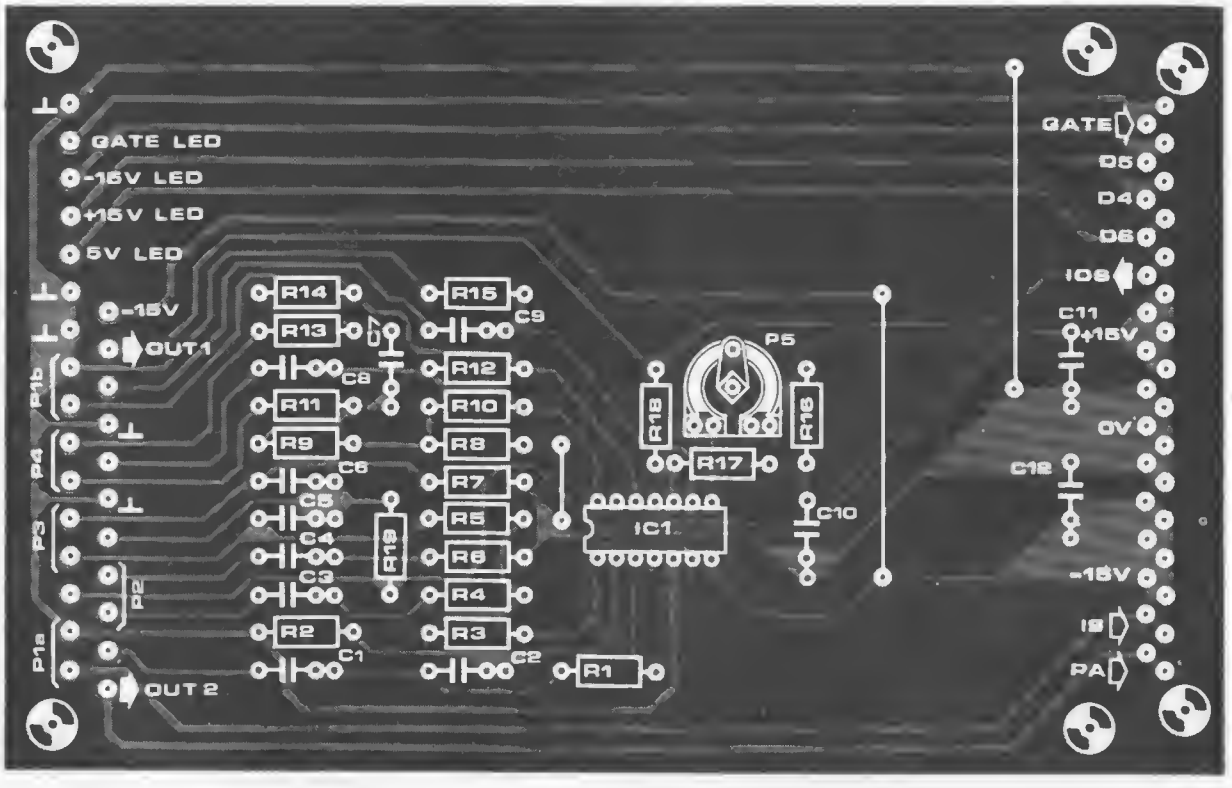

Parts list for figures 1 and 2.

Resistors:
R1,R2 = 82 k
R3,R8,R18 = 470 Ω
R4,R6 = 1k5
R5,R7,R11,R13 = 6k8
R9,R14 = 3k9
R10,R12 = 100 k
R15,R17 = 220 k
R16 = 22 k
R19 = 4k7

Potentiometers:
P1a,P1b = 4k7 log ganged pot.
P2,P3,P4 = 100 k lin.
P5 = 220... 270 k preset.

Capacitors:
C1,C2,C9 = 100 n
C3,C4 = 10 n
C5,C6 = 39 n
C7 = 15 n
C8 = 3n3
C10,C11,C12 = 680 n

Semiconductors:
IC1 = 4136 (DIL package) EXAR, Fairchild, Raytheon or Texas.

Miscellaneous:
31-way connector to DIN 41617
3.5 mm jack socket
6.3 mm jack socket
4 collet knobs, 13...15 mm diameter, with pointer.

Figure 3. Front panel layout for the COM (EPS 9729–2).

Figure 4. Wiring diagram for the front panel mounted components.

Figure 5. Inter-module wiring for the basic Formant system. Supply voltage connections have been omitted for reasons of clarity. The LFO and noise modules have been omitted as the only hardwired connections they have are supply connections.

Figure 6. The 'gate-LED' output of the interface receiver can be simplified by mounting R30 in the 'D4' position.

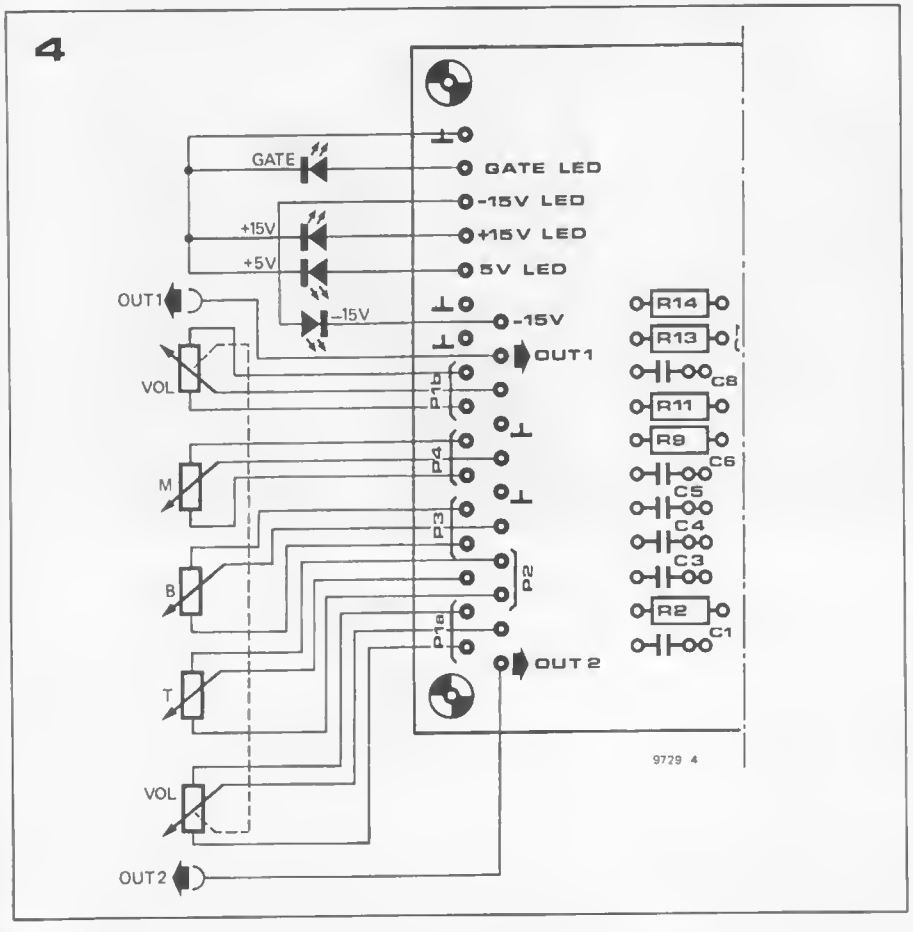

flexible single-core cable of about 30 cm length is fitted with a 3.5 mm jack plug at each end. The cable is soldered to the centre contact (ball) of the plug, no earth connection being necessary as the earth return is made through the internal module wiring. In the interests of long life the patchcord wire should not be too thin, and some sort of strain relief should be used where the wire enters the plugs. About a dozen patchcords should prove sufficient for most applications. Alternatively, to keep the front panels more tidy the patchcords can be made in several different lengths, each designed for an interconnection between two specific modules. Different colours of wire may also be used to simplify checking of complicated patch connections.

Front panels

As each module was described, a suitable front panel layout was also given. It has now been decided to make these panels available through the EPS printed circuit board service. As shown in figure 7, the pre-drilled metal boards are sprayed matt black, and the legends and scales are printed in white. Experiments have shown that this combination

5

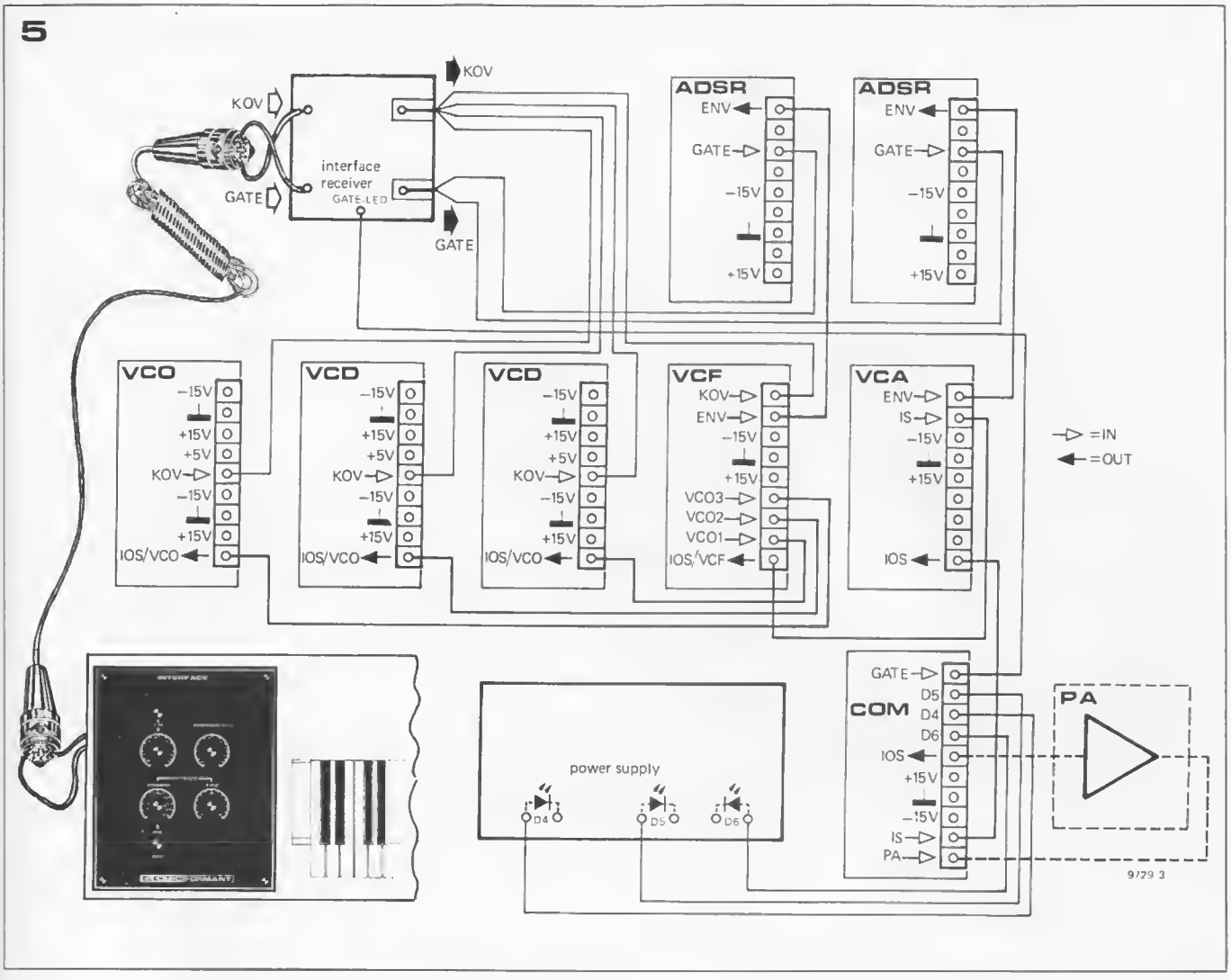

provides good legibility even under extreme lighting conditions.
Further details are given in this month's EPS list.

Extending Formant

Although the Formant system so far described is a versatile instrument giving performance comparable to commercial designs at a greatly reduced cost, it is nonetheless relatively unsophisticated compared to the larger commercial instruments. However, because of the modular construction it is a simple matter to extend the system. Quite a lot can be accomplished simply by adding more of the modules already described, for example extra VCOs, VCFs and VCAs, to obtain a more varied sound.
Many effects however, require the addition of completely new modules and ancillary circuits, some of which it is hoped will be discussed in future issues of Elektor. One possibility which can be implemented immediately is the addition of the Elektor equaliser (January 1978) to allow presettable tailoring of the synthesiser spectrum. The equaliser p.c. board is of Eurocard format, compatible with the other Formant modules. Another module which it is hoped to feature, which will greatly increase

6

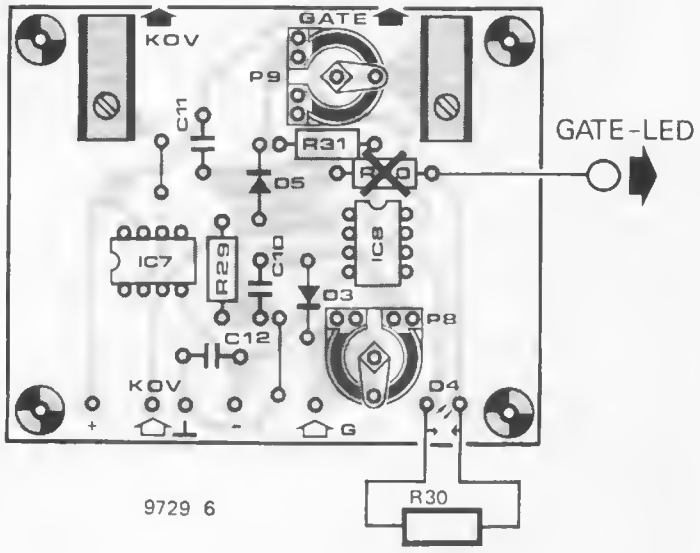

Figure 7. The complete set of front panels is now also available through the EPS service.

the tone colour possibilities of the system, is a 24 dB/octave VCF module.
Banks of resonant filters are also a useful addition to the tone-forming capabilities of the synthesiser, especially for the production of vocal-type sounds. These are not voltage-controlled filters, but have manually presettable centre frequency and Q factor.

Phasing circuits are frequently used in synthesisers, and are particularly useful for more realistic reproduction of string tones. Another tone modifying circuit which is often used is the ring modulator. This circuit produces the sum and difference of two input frequencies at its output. The frequencies produced are not necessarily harmonically related, and the sound is not particularly 'musical'; however, the ring modulator is extremely useful for special effects such as bells, gongs and cymbals.

In its basic form the range of expression available from the synthesiser is somewhat limited by the fact that it is played by a keyboard. However, there are various ways in which this can be remedied. The addition of a 'pitch-bender' joystick, which feeds a manually controllable DC voltage to the VCOs, allows modulation of the pitch of a note by hand in much the same way that a guitarist 'pulls' the strings of his guitar.

An interesting possibility is the elimination of the keyboard by playing the synthesiser via another instrument. This is accomplished by the use of a pitch-to-voltage converter, which produces an output voltage proportional to the pitch of the control instrument. This in turn controls the frequency of the synthesiser VCOs. An envelope follower produces an output voltage which follows the control instrument's amplitude, and this is used to control the gain of the VCAs. The result is a synthesiser sound which has the dynamics of the original instrument.

Other useful additions to the synthesiser system are sequencers, sample-and-hold circuits and reverberation/echo units.
Sequencers are used to store (either by analogue or digital means) a sequence of VCO/VCF control voltages. These are then 'played back' into the synthesiser automatically to generate a note sequence which can, for example, be used to provide the backing for a manually played melody.

A sample-and-hold circuit is frequently used to take sequential samples of the instantaneous voltage of a sawtooth waveform. This sequence of voltage samples is used to control the synthesiser to generate a pseudo-random sequence of notes.

Reverberation units are used to enhance the somewhat 'dry' sound of the synthesiser by allowing notes to die away gradually rather than be cut off abruptly when a different key is pressed. Such units may contain mechanical delays such as plates or springs, or purely electronic delays such as analogue shift registers may be employed.

Loudspeakers

Before concluding this article a few words on the choice of loudspeakers for use with Formant will not come amiss. Readers building a synthesiser for home use will probably wish to play the instrument through an existing hi-fi setup, at least to begin with. If this is the case care should be taken not to overload the loudspeakers, by keeping the volume fairly low. Hi-fi loudspeakers are designed to handle a much more broadly distributed power spectrum than that produced by a synthesiser, and it is quite easy to damage the tweeters with a sustained high frequency note.
For serious use a purpose-designed loudspeaker system should certainly be considered. Horn systems are to be favoured because of their high efficency and a dealer who specialises in electronic music systems should be able to offer advice on suitable loudspeakers. ⏮

loudspeaker connections

Many hi-fi enthusiasts may not realise that significant distortion may be introduced into an audio signal by the connections between the amplifier output and the loudspeakers. In the first place, output current from the amplifier has to travel across several non-soldered metal-to-metal contacts, for example plug and socket connections at the amplifier outputs and the loudspeaker inputs, and loudspeaker switches within the amplifier (of which more later). For minimum distortion these contacts should not only have a very low resistance, but must also have a constant, linear resistance.

Oxidation of the metal surfaces of plugs, sockets and switch contacts can produce a non-linear resistance which varies with the current flowing through it, thus distorting the signal fed to the loudspeakers. DIN loudspeaker plugs and sockets are particularly bad in this respect due to their very small contact area, and should be avoided. Where non-soldered connections must be made the use of screw terminals or robust 4 mm 'banana' plugs and sockets is to be preferred.

The second area which can cause degradation of the audio signal is the connecting cable itself. When a loudspeaker is being driven by an amplifier the loudspeaker cone should move exactly in sympathy with variations of the amplifier output voltage. Ideally, if a loudspeaker is fed with, say, a step input, the cone should move quickly to the appropriate position and stop. In practice, of course, this does not happen. A loudspeaker possesses inertia and compliance, so that the cone will tend to oscillate about its final position before settling down. Whilst this 'ringing' is in progress the loudspeaker acts as a generator and tries to pump current back into the amplifier output. If the amplifier output impedance is low (and it generally is) the loudspeaker sees a short-circuit and the cone movement is quickly damped by electromagnetic braking. The 'damping factor' of an amplifier is defined as the ratio of the load impedance to amplifier output impedance. As the output impedance of a modern transistor amplifier is generally a fraction of an ohm, damping factors are typically between 50 and 200 with an 8 ohm load. However, the resistance of the loudspeaker connecting cable appears in series with the amplifier output and must be considered as part of the amplifier output impedance. If the loudspeaker cable is thin its resistance will be high and the damping factor will be considerably reduced. In addition, some of the amplifier's output voltage will be dropped across the cable resistance rather than appearing across the loudspeaker.

Thus the second rule when connecting loudspeakers is to use heavy-duty cable. Fuses, which are sometimes inserted in series with amplifier outputs for loudspeaker protection, should also be avoided since they can have a significant resistance.

Recent research, particularly by Japanese manufacturers, seems to indicate that the inductance of loudspeaker cables has a significant effect on transient response, and Hitachi, JVC, Pioneer and Sony are all introducing special loudspeaker cables which are claimed to give an improved sound. Whether or not these claims are true is still a matter for conjecture.

Returning to the subject of loudspeaker switching, figures 1 and 2 show two typical switching arrangements which allow two sets of speakers to be connected to an amplifier, either independently or simultaneously. One channel only is shown and the circuits are identical for the other channel. Although such switching arrangements offer convenience of use, they may not be such a good idea from a sound quality point of view due to the contact resistance of the switches. If loudspeaker switching is employed in an amplifier then the switches used should be rated at several amps to ensure minimum contact resistance.

Both the switching arrangements shown in figures 1 and 2 have their advantages and disadvantages. In figure 1 both speakers appear in parallel across the amplifier output in the A + B position. Whilst this does mean that the damping factor is maintained the reduced load impedance can cause overloading.

In figure 2 the speakers are connected in series in the A + B position. Assuming that both speakers have the same impedance this connection, of course, doubles the load impedance, so there is no risk of overload. However the available output power is halved (since $P = U^2/R$) and the damping factor is reduced to less than unity, since each loudspeaker has the other in series with it as a source impedance.

In conclusion, anyone contemplating the building of an audio amplifier and/or loudspeakers would be well advised to bear in mind all the points raised in this article. To summarise:

1. Connection to the loudspeakers should be made with the minimum number of non-soldered connections (plug and socket connections and switches) in series with the signal path.
2. The cable to the loudspeakers should have as low a resistance as possible. Fuses in series with the loudspeakers, although seemingly desirable from a circuit protection point of view, have a detrimental effect on sound quality and should be avoided.

1

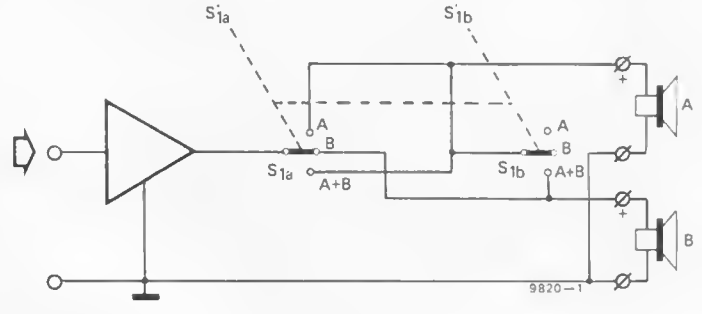

2

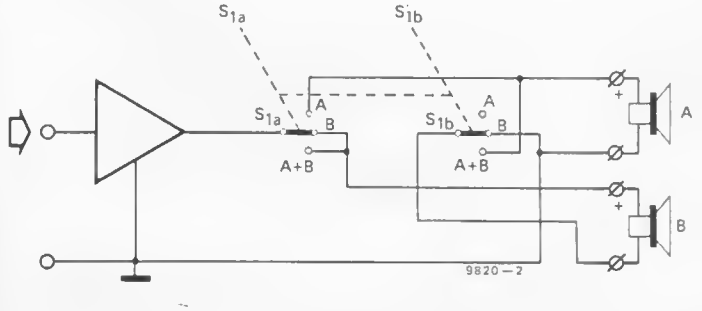

market

16 segments

The entire alphabet from A to Z, all digits from 0 to 9, plus, minus, equals and summation signs and a whole series of other symbols may be depicted by a 16-segment display, which Siemens is now putting on the market under the designation HA 4041. This LED display offers an alphanumeric set comprising 64 characters each four millimeters high. Four such displays are combined on one module with the associated electronics. The modules can be arranged in rows of practically unlimited length.
The so-called 7-segment displays with three horizontal and four slightly sloping vertical bars are well-established in a wide field of applications ranging from measuring instruments to TV sets and watches and clocks of all sizes. Liquid crystals and oblong light-emitting diodes are equally suitable as the display medium. However conventional 7-segment displays essentially provide for the ten digits only.

The new HA 4041 module incorporates extensive electronics for four 16-segment displays, which should markedly increase the presentable information. Each module contains a decoder for the 64-character ASCII set, a multiplexer, a memory and the LED driver stages. Externally, the circuits behave like a RAM device. The operating voltage of 5 V permits easy interfacing with, for example, TTL.

A very significant feature is compatibility with microprocessors, which could now learn to talk with the aid of the 16-segment displays – an economically unjustifiable proposition so far. The alphanumeric character set permits the display of operating states and program progress. A related application would be in keyboard stations or phototype-setting equipment, where the typed information could be displayed for checking purposes before it is printed.
Each of the four display units of a module puts out 0.1 mcd per segment with a viewing angle of 20° from all sides. Up to 16 displays (four HA 4041 modules each with a width of 25 mm) may be lined up as an array, while more than 16 displays can be combined with modest circuit requirements. The module packages are designed to present an evenly spaced display, also when used in arrays.

Siemens AG, Postfach 103,
D-8000 München 1,
Federal Republic of Germany

(696 M)

Dot matrix printer

A range of compact dot matrix impact printers, the 7040 series, has been introduced by Impectron Limited. Suitable for a wide range of data output applications such as point of sale documentation and data logging, the low cost range features ease of operation, compact size and simple interface circuitry.
The printer utilises a serially driven print element consisting of 7 print solenoids and associated print wires. The wires are arranged in a vertical line and driven horizontally across the paper at constant speed. Print speed is over one complete 3.3" line per second, and each line contains 40 characters. Character height is 0.123 inches.
By use of external control circuitry, the printer may produce characters of almost any density or fount desired. Because the print head travels at constant speed, there is no need for a complex feedback system to determine the correct timing of print pulses. Ribbon feed, ribbon reverse (and in some cases paper feed) are controlled automatically without control signals.
Unlike many printers, the 7040 series has no clutches, timing discs or reversing mechanisms to control print head movement. The head always traverses a complete line from left to right and then returns to its home position regardless of the number of characters printed on each line.

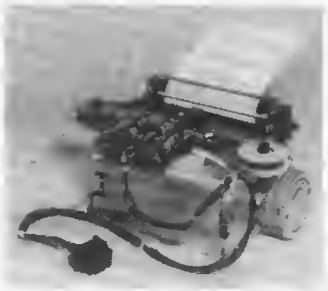

The range has been designed to produce up to 5 copies of the top copy, depending on paper thickness and type. Maximum paper thickness is 0.015" overall. Two models are currently available from Impectron. The basic model 7040 is a simple printer with no paper supply or document handling mechanisms. Optional extras do however include paper roll holder, journal take up and assembly, or secondary motor for high speed paper feed.
A more sophisticated variation, the Model 7040T, is arranged in a flat bed document printer configuration. As documents are inserted for printing, a solenoid-activated roll clamps the document, permitting proper feeding and preventing accidental or premature removal. This model also features a highspeed document feed of 10 lines per second. Optional features of the 7040T include reverse document feed and top of form sensors.

Specification:

Speed:	1.04 lines/ second
Character Height:	0.123 inches
Data Input:	Synchronous
Line Length:	3.3 inches
Print Solenoid Power:	40 V (DC) ± 10% @3.6A peak current per solenoid. Average current approx. 0.87A for 1.5 ms cycle time.

Impectron Limited,
Impectron House,
23-31 King Street,
London W3 9LH, England

(716 M)

Remote control chips

AMI Microsystems have introduced a 31-command remote control chip set with keyboard inputs, oscillators, and both analog and digital receiver output all on board the chip.
Consisting of an S2600 transmitter and an S2601 receiver, the set reduces the part count in equipment designed for remote control via radio frequency, infrared, ultrasonic or hardwire transmission media. Among the applications for the devices are motorized toys such as trains and boats, home security systems, automatic telephone calling equipment, industrial controls, TV and stereo controls, and traffic controls for emergency vehicles.
The AMI S2600 and S2601 have eliminated the need for external crystals; only a resistor and a capacitor are required externally for a frequency reference. The S2601 receiver will tolerate up to ± 24% difference in the timing frequency and still operate. However, the circuit has a very high immunity to noise or spurious commands.
Spurious command rejection has been achieved through a 5-bit command code system which requires that identical, proper commands be transmitted twice in succession before the receiver issues an output. In addition, a correct five-bit fixed (mask-programmable) preamble code must be received.

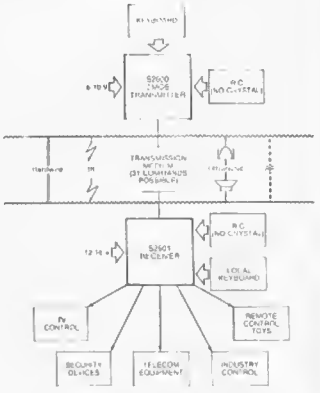

Eleven outputs (six digital, three analog, a pulse train and an on/off) are available from the receiver. Five binary outputs present the five-bit command code received; the sixth digital output is a 'data valid' signal. The pulse train is useful for indexing a stepping switch, as in TV channel selection, or operating a stepping or counting device in industrial controls or toys. The on/off output can be used to remove and restore the main power supply. The analog outputs can independently provide up to 64 distinct DC levels for controlling motor speed, volume, brightness, or similar electronic settings; one of these analog outputs is mutable and can be used for TV sound control.

market

The S2600 transmitter is a low power drain CMOS chip (dissipating only 20 mW) with an on-chip oscillator, 11 keyboard inputs, a keyboard encoder, a shift register and control logic. Its output is a 40 kHz square wave which is pulse code modulated. The S2600 can transmit a 12-bit message including sync frame, preamble, 5-bit command code, and end of message bits every 38.4 milliseconds.
The S2601 receiver is a P-channel MOS chip with on-chip oscillator, five keyboard inputs, a 40 kHz signal input, decoding logic and eleven outputs. Its on-chip memory saves received commands and the logic compares them with later receptions. If the codes do not match, the receiver saves the last code received for its next comparison try. When two successive identical codes are received, a valid output is issued.

AMI Microsystems Ltd., 108 A Commercial Road, Swindon, Wiltshire, England.

(718 M)

Digital inductance meter

AIM Cambridge Ltd is pleased to announce a new, low cost Automatic Digital Inductance Meter type DLM307. This instrument, intended as a complement to the Digital Capacitance Meter DCM302, is fully auto-ranging and will measure up to 1.999 H full scale, whilst the most sensitive range has a resolution of 1 μH. The readout is a 3½ digit LED display and the unit can be powered either from batteries or a small mains power unit, both of which are supplied. As in AIM's Digital Capacitance Meter, the unit has no operator controls apart from a touch-pad which is used to turn on the instrument for about 10 seconds. The correct measurement range is found automatically within 2 seconds of switch-on, after which measurements are repeated every 0.4 seconds.
The measurement technique

employs a highly linear L-R oscillator whose period is proportional to the value of the inductor being measured. This period is then measured using digital techniques employing CMOS integrated circuits. One advantage of this approach is that the measurement frequency is appropriate for the value of inductor being measured. For example, large value inductors are measured at frequencies between 25 Hz and 250 Hz whilst small inductors are measured at frequencies up to 1 MHz.

Aim Cambridge Limited, Edison Road, Industrial Estate, St. Ives, Huntingdon, Cambs. PE17 4LF England.

(715 M)

Microwave spectrum analyser

The new 7L18 microwave spectrum analyser from Tektronix incorporates several advanced technological innovations to offer a combination of exceptional performance and ease of operation. A high-stability phase-lock system yields a resolution of 30 Hz at frequencies up to 12.5 GHz, while external waveguide mixers extend the overall frequency range up to 60 GHz. Other important technological developments used in the 7L18 include microprocessor-aided controls for ease of operation and adjustment, a split digital-storage system, and YIG tuned filters for spurious-free display from 1.5 GHz to 18 GHz. The 7L18 is a three-module wide plug-in unit for the Tektronix 7000 Series modular instrumentation range. With a direct coaxial input it will display the spectrum of signals from 1.5 to 18 GHz, with a resolution of 30 Hz up to 12.5 GHz.
The new external waveguide mixers extend the frequency coverage to 60 GHz with a response flatness specified at ± 3 dB or better. Hence relative amplitude measurements can be made with confidence when operating with waveguide mixers. In addition, the built-in preselector system is fully characterised for absolute amplitude measurements up to 18 GHz.
Measured in terms of residual frequency modulation, the stability resulting from the new phase-lock circuitry is specified as 10 Hz or less up to 4.5 GHz (about four parts in 10^8).
Digital storage provides flicker-free displays at the lowest sweep speeds, fine detail and unlimited storage time for subsequent viewing, comparison or easy photographic recording. A split memory allows comparison of a reference with an existing spectrum or a calculated display of the difference between two spectra. The storage circuitry also includes a maximum-hold capability that allows monitoring of frequency or amplitude signal variations.
A microprocessor provides automatic resolution and sweep time/division modes to optimise setting up the display and prevent many potential operator errors. In the non-auto mode of operation, any combination of control settings which results in an uncalibrated display also turns on the 'uncalibrated' indicator light.
The 7L18 spectrum analyser is easily transportable, and applications include microwave-relay and satellite communication, frequency management and microwave component and system manufacture.
The instrument can also be converted to a high-quality microwave receiver for time-domain measurements by setting the frequency span to zero and using the calibrated time base.

Tektronix U.K. Ltd., Beaverton House, P O Box 69, Harpenden, Herts, England.

(717 M)

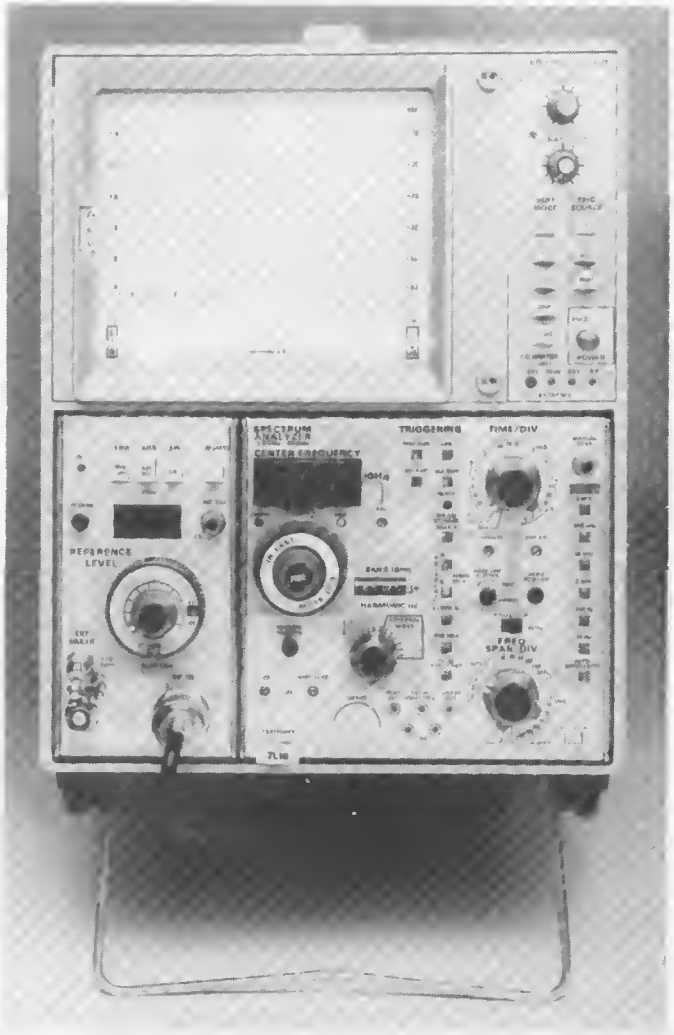

market

P.C.B. KIT

Mega Electronics Ltd, introduced a comprehensive kit which enables the preparation of artwork for, and the production of, both printed circuit boards and boards and front panels or labels.

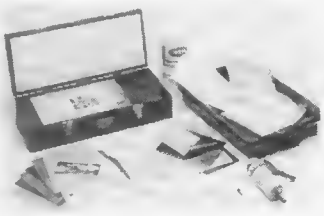

Known as the Photolab Kit, it consists of an ultraviolet exposure unit, drafting aids and film, positive resist coated epoxy glass laminate sheets, developing and etching trays, label and panel materials, high-speed drill, and all the requisite developers.
The Photolab Kit has been designed for use by both the hobbyist and the professional engineer. It has been introduced to fill the gap between commonly used 'l-off' prototype p.c.b. production methods and the facilities offered by the existing, larger kits currently available. It is priced at only £ 44.50, complete, and can handle p.c. boards and labels of up to 9 x 6 in.

Mega Electronics Ltd,
9, Radwinter Road,
Saffron Walden, Essex CB11 3HU,
England

(682 M)

μP based analyser

The 7L5 from Tektronix U.K. Ltd. is a microprocessor-based spectrum analyser that achieves exceptional frequency accuracy (two parts in 10^6) through a unique combination of synthesiser and digital technology. The inherent stability of the synthesiser method used, coupled with digital tuning techniques, means that the centre frequency can be set with 6-digit accuracy immediately after turn-on, with no need to fine-tune the displayed signal.
The built-in microprocessor intelligence is used to simplify operation of the instrument. Internal processing decodes control settings, processes frequency and reference level information and optimises sweep time and resolution for the chosen frequency span. At turn-on, the 7L5 is preset to a reference level of +17 dBm and a centre frequency of zero, which provides not only input attenuation to protect the front end but also a marker to verify correct operation.
The 7L5 spectrum analyser has a full 80 dB spurious-free dynamic range for measuring wide relative amplitudes. Nanovolt sensitivity allows very low-level signals and noise to be measured. A front-panel input buffer control greatly increases front-end immunity to intermodulation, while maintaining a constant reference level.

The instrument is fully calibrated in dBm, dBV or volts per division. The reference level can be set in 1 dB steps, eliminating the need to interpolate amplitude levels. To accommodate a wide variety of input impedances, the 7L5 uses plug-in modules. Three standard modules offer 50 Ω, 75 Ω and 1 MΩ, and special modules for other impedances can be provided. The 7L5 incorporates a digital storage and averaging technique. The entire display is stored electronically and updated during each sweep, and two complete displays can be held in the memory for comparison. Two display modes are available: a conventional peak display or a digitally averaged display. For special measurements, such as signal/noise ratio, these two modes can be used simultaneously by setting the continuously adjustable peak/average threshold. A 'maximum hold' control enables maximum signal levels to be stored for checking long-term amplitude and frequency drifts. Options available for the 7L5 spectrum analyser include a tracking generator, logarithmic frequency display and front-panel readout unit.

Tektronix U.K. Ltd.,
Beaverton House, P O Box 69,
Harpenden, Herts, England

(678 M)

Chiming annunciator

A new chiming audible has been added to the Highland range of audible warning devices.
The repeating chime has a frequency of 2900 Hz ± 500 Hz working at 6 . . . 16 V DC.

Maximum current used at 16 V DC is 8 mA. Light in weight and very compact it is easily installed with a single 32 mm hole fixing. Overall dimensions are 42.9 mm (1 11/16") diameter at back, 47.6 mm (1 7/8") in length. It is simply connected by two screw cable connections.
Chiming Sonalerts produce a unique tone by electronic means. A semi-conductor oscillator driving a piezo-ceramic transducer produces a penetrating but not unpleasant sound. The audible volume can be varied by adjusting the supply voltage.

Highland Electronics Ltd.,
Highland House, 8 Old Steine,
Brighton, East Sussex,
BN1 1EJ England

(683 M)

5 Amp negative voltage regulator

This hybrid voltage regulator, the μA79HG, is an adjustable four terminal device capable of supplying in excess of 5 A over a −24 V to −2.2 V output range. It is a complement to Fairchild's μA78HG positive adjustable regulator.

It has been designed with all the inherent characteristics of the monolithic four terminal regulator and offers full thermal overload plus short-circuit protection. Should the safe operating area ever be exceeded, the device simply shuts down.
Packaging is in a hermetically sealed TO-3 can. Absolute maximum ratings include an input voltage of −40 V and internal power dissipation of 50 W at a case temperature of 25°C.

Fairchild Camera & Instrument (UK) Ltd., 230 High Street, Potters Bar, Herts, EN6 5BU, England

(681 M)

Elektor announces new logic

Beek, Limburg, 1 Apr. 1984- Elektor, one of the world's major suppliers of kits and components, today announces a new line of feminine logic which is now available from stock to Elektor readers.
The first device in this new logic family is called the 'Maybe' gate. Its new logic symbol is shown here.

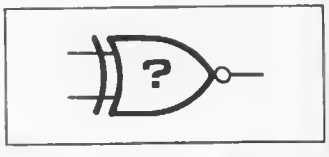

The device functions as follows:
(a) inputs 1 and/or 2 'high', may cause the output to go 'high' (but maybe not)
(b) if the output does go 'high' it will remain 'high' unless it goes 'low'
(c) If the output is 'high' and either input 1 or 2 goes 'low' the device will probably go 'low'

Elektor is certain you can see the potential for the 'Maybe' gate in such items as 'household computers', 'computer-piloted automobiles' and, most important of all, weather-forecasting computers.

Elektor, Peter Treckpoelstraat 2, 6191 VK Beek (L), Netherlands.

(695 M)

TUPTUNDUGDUS

	type	U_{ceo} max	I_c max	h_{fe} min.	P_{tot} max	f_T min.
TUN	NPN	20 V	100 mA	100	100 mW	100 MHz
TUP	PNP	20 V	100 mA	100	100 mW	100 MHz

Table 1a. Minimum specifications for TUP and TUN.

Tabla 1b. Minimum specifications for DUS and DUG.

	type	UR max	IF max	IR max	P_{tot} max	CD max
DUS	Si	25 V	100 mA	1 µA	250 mW	5 pF
DUG	Ge	20 V	35 mA	100 µA	250 mW	10 pF

Tabla 2. Various transistor types that meat the TUN specifications.

TUN		
BC 107	BC 20B	BC 384
BC 108	BC 209	BC 407
BC 109	BC 237	BC 408
BC 147	BC 238	BC 409
BC 148	BC 239	BC 413
BC 149	BC 317	BC 414
BC 171	BC 31B	BC 547
BC 172	BC 319	BC 54B
BC 173	BC 347	BC 549
BC 1B2	BC 34B	BC 582
BC 183	BC 349	BC 5B3
BC 1B4	BC 382	BC 5B4
BC 207	BC 383	

Tabla 3. Various transistor types that meet the TUP specifications.

TUP		
BC 157	BC 253	BC 352
BC 15B	BC 261	BC 415
BC 177	BC 262	BC 416
BC 17B	BC 263	BC 417
BC 204	BC 307	BC 41B
BC 205	BC 30B	BC 419
BC 206	BC 309	BC 512
BC 212	BC 320	BC 513
BC 213	BC 321	BC 514
BC 214	BC 322	BC 557
BC 251	BC 350	BC 55B
BC 252	BC 351	BC 559

The letters after the type number denote the current gain:

A a' (β, h_{fe}) = 125-260
B a' = 240-500
C a' = 450-900.

Table 4. Various diodes that meet the DUS or DUG specifications.

DUS		DUG
BA 127	BA 31B	OA 85
BA 217	BAX13	OA 91
BA 218	BAY61	OA 95
BA 221	1N914	AA 116
BA 222	1N4148	
BA 317		

Tabla 5. Minimum specifications for the BC107, -108, -109 and BC177, -178, -179 families (according to the Pro-Electron standard). Note that the BC179 does not necessarily maet the TUP specification ($I_{c,max}$ = 50 mA).

	NPN	PNP
	BC 107 BC 10B BC 109	BC 177 BC 17B BC 179
U_{ce_0} max	45 V 20 V 20 V	45 V 25 V 20 V
U_{eb_0} max	6 V 5 V 5 V	5 V 5 V 5 V
I_c max	100 mA 100 mA 100 mA	100 mA 100 mA 50 mA
P_{tot} max	300 mW 300 mW 300 mW	300 mW 300 mW 300 mW
f_T min.	150 MHz 150 MHz 150 MHz	130 MHz 130 MHz 130 MHz
F max	10 dB 10 dB 4 dB	10 dB 10 dB 4 dB

Wherever possible in Elektor circuits, transistors and diodes are simply marked 'TUP' (Transistor, Universal PNP), 'TUN' (Transistor, Universal NPN), 'DUG' (Diode, Universal Germanium) or 'DUS' (Diode, Universal Silicon). This indicates that a large group of similar devices can be used, provided they meet the minimum specifications listed in tables 1a and 1b.

Table 6. Various aquivalants for tha BC107, -108, . . . families. The data are those given by the Pro-Electron standard; individual manufacturers will sometimas give better specifications for thair own products.

NPN	PNP	Case	Remarks
BC 107 BC 10B BC 109	BC 177 BC 178 BC 179		
BC 147 BC 148 BC 149	BC 157 BC 158 BC 159		Pmax = 250 mW
BC 207 BC 20B BC 209	BC 204 BC 205 BC 206		
BC 237 BC 23B BC 239	BC 307 BC 308 BC 309		
BC 317 BC 318 BC 319	BC 320 BC 321 BC 322		I_{cmax} = 150 mA
BC 347 BC 34B BC 349	BC 350 BC 351 BC 352		
BC 407 BC 408 BC 409	BC 417 BC 418 BC 419		Pmax = 250 mW
BC 547 BC 548 BC 549	BC 557 BC 558 BC 559		Pmax = 500 mW
BC 167 BC 16B BC 169	BC 257 BC 258 BC 259		169/259 I_{cmax} = 50 mA
BC 171 BC 172 BC 173	BC 251 BC 252 BC 253		251 . . . 253 low noise
BC 1B2 BC 183 BC 1B4	BC 212 BC 213 BC 214		I_{cmax} = 200 mA
BC 582 BC 5B3 BC 5B4	BC 512 BC 513 BC 514		I_{cmax} = 200 mA
BC 414 BC 414 BC 414	BC 416 BC 416 BC 416		low noise
BC 413 BC 413	BC 415 BC 415		low noise
BC 3B2 BC 3B3 BC 3B4			
BC 437 BC 438 BC 439			Pmax = 220 mW
BC 467 BC 468 BC 469			Pmax = 220 mW
	BC 261 BC 262 BC 263		low noise

7400+ (7403*)

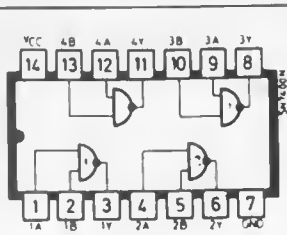

7401*

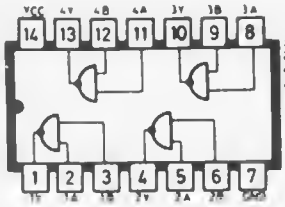

7402+ (7428)

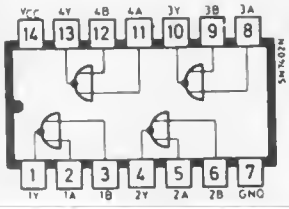

7404+ (7405*, 7406*, 7416*)

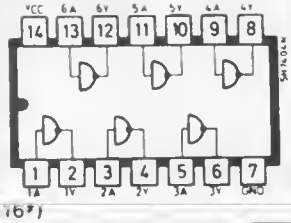

7407

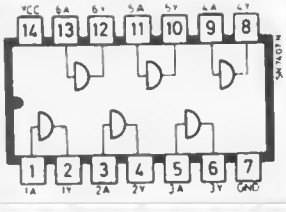

7408

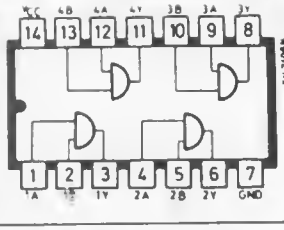

7410+ (7412*)

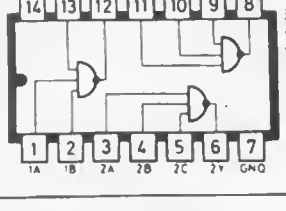

7413 (7420+, 7440)

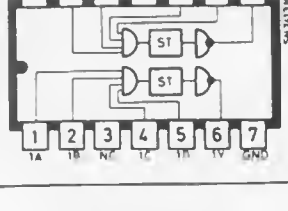

7414+

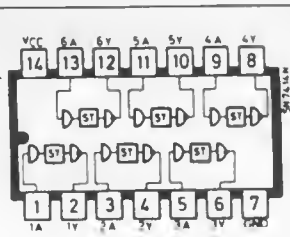

7430

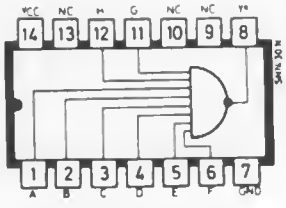

7442+

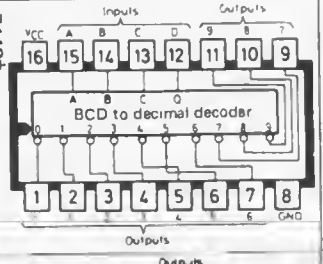

7447

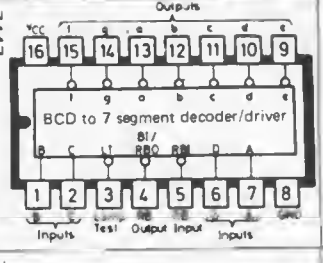

7473+

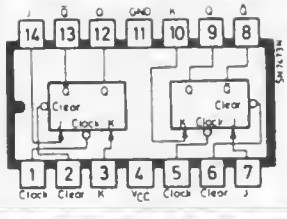

7474+

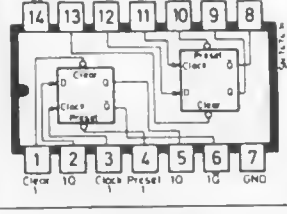

7475

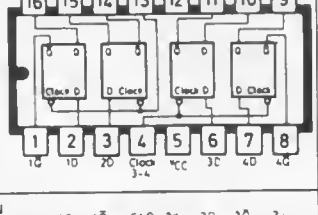

7476+

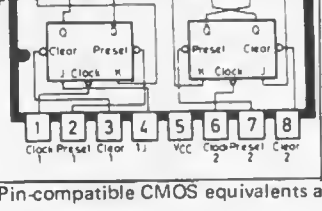

7486

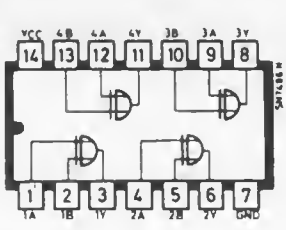

7490

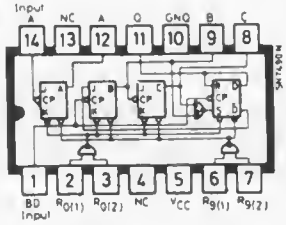

7492

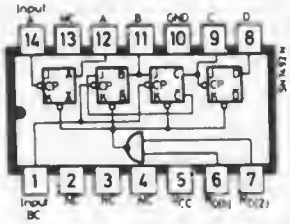

7493

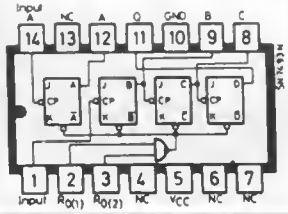

74121

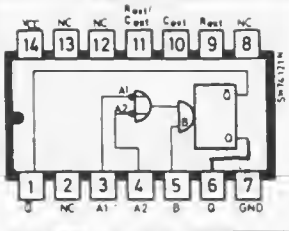

74122

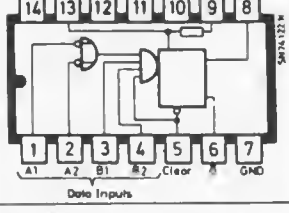

74123

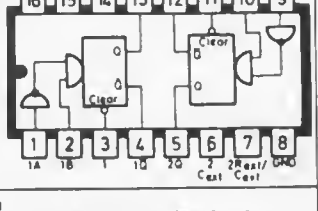

74132

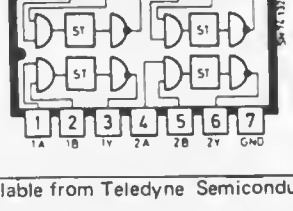

74141

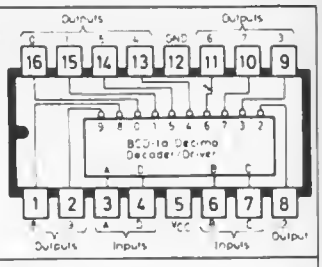

74143 (74144)

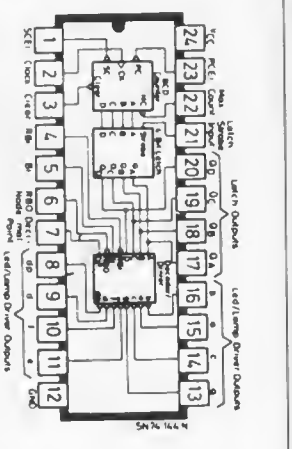

74154+

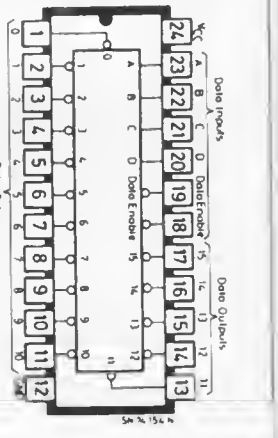

74164

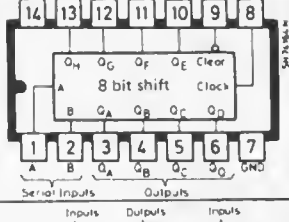

74193+

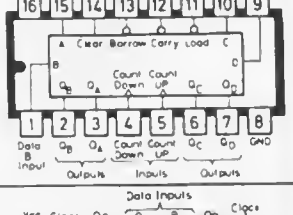

74196

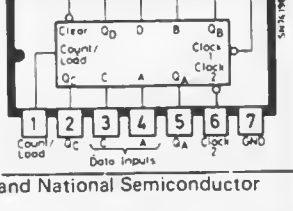

+ Pin-compatible CMOS equivalents available from Teledyne Semiconductor and National Semiconductor

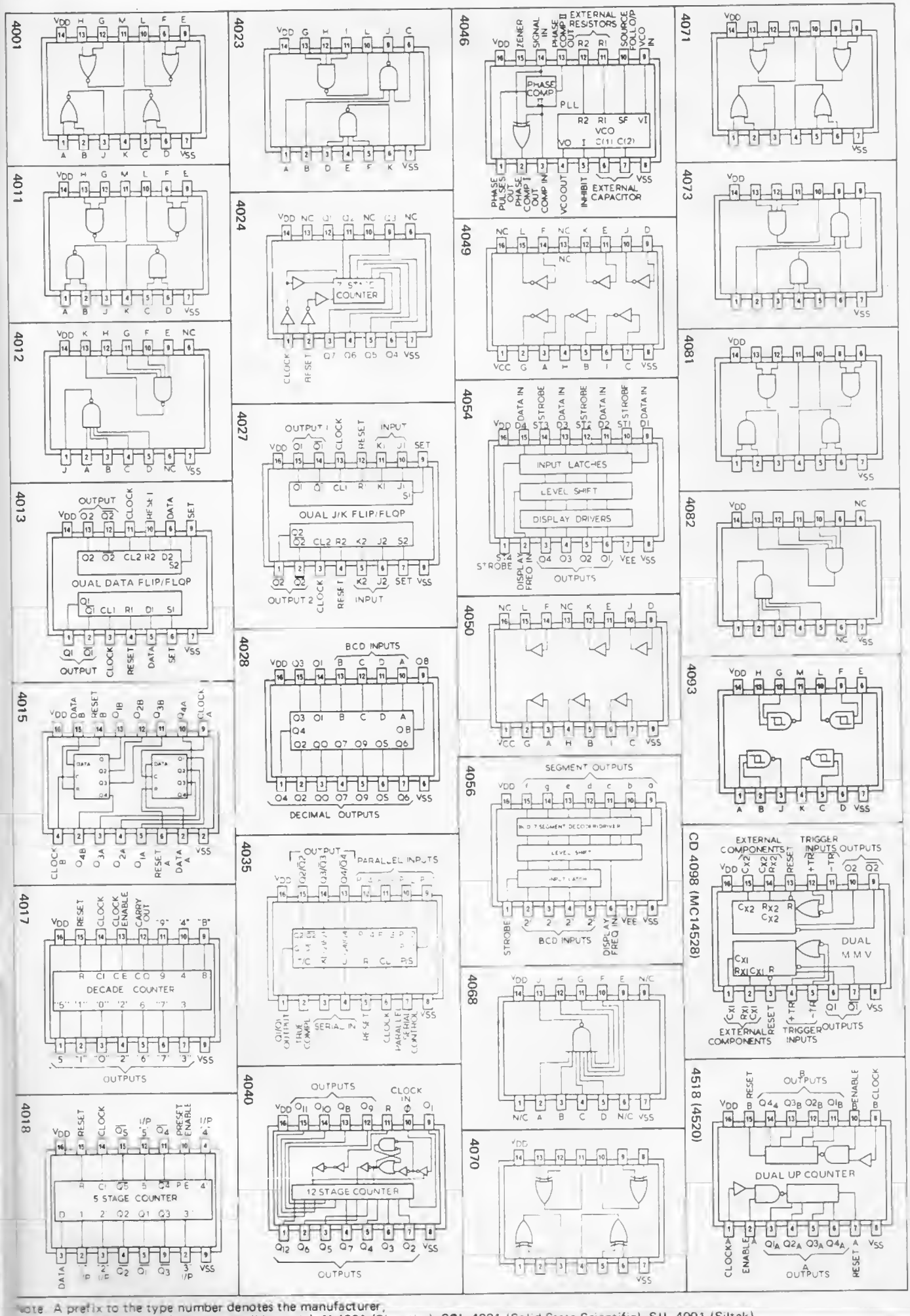

Note: A prefix to the type number denotes the manufacturer,
e.g. CD 4001 (RCA), MC 14001 (Motorola), N 4001 (Signetics), SCL 4001 (Solid State Scientific), SIL 4001 (Siltek).

PHILTRON

Electronic Components Specialists

325, DUTOIT STREET, P.O. BOX 2749, PRETORIA,
0001 TRANSVAAL. REPUBLIC OF SOUTH AFRICA
Telegraph address "TRINITRON"

Stockists of

Heathkit — Siemens — Monsanto — Texas — Interface — Linear — MOS — Signetics — Fairchild PRODUCTS

Crystals & Sockets
Piezo Electric Ceramics

ELEKTOR

MAGAZINES
BINDERS
PRINTED CIRCUIT BOARDS

Electronic books, Projects, data etc.

Resistors

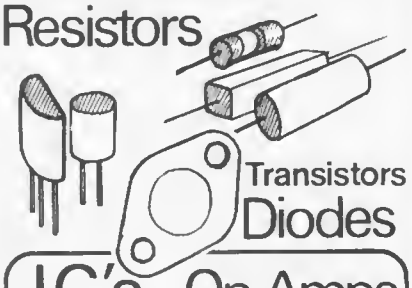

Transistors
Diodes

Capacitors

Tantalum
Polyester
Electrolytic
Co-axial &
P.C. Mount

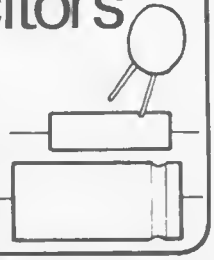

I.C.'s

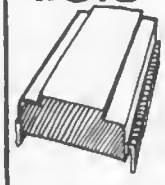

Op Amps

Vol. Regs.,
Lin. Amps,
Digitals, Nor,
Latching etc.
etc.

LED'S

Panel Meters

Toggle switches . . .
Connectors . . .
Potentiometers . . .
Trim pots . . .

Beginners Kit

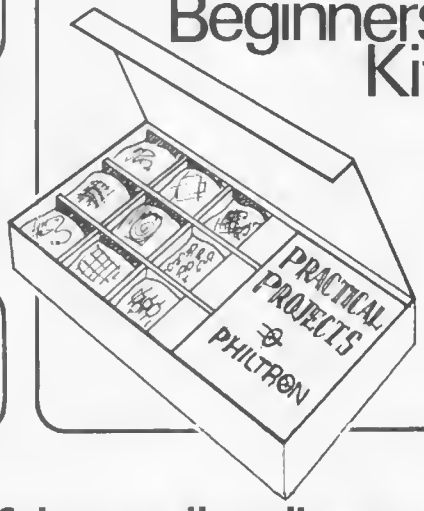

Relays

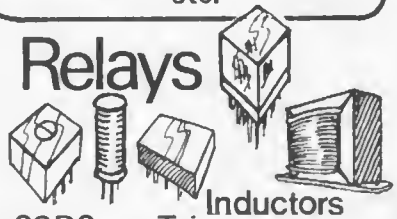

Inductors
SCRS . . . Triacs . . .
Quaracs . . . Variacs . . .
Transformers

Sole South African distributors for ELEKTOR

Trade Enquiries Welcome

HB ELECTRONICS

In touch with tommorrows technology...

22 Newland Street Kettering Northants.
Technical enquiries ring Kett 520910 sales & order enquiries 88922
Shop open Monday to Saturday 9.30 to 6.00 p.m. Early closing Thursday
Arcade Shopping order service after 6.00 p.m.
Back issues of Elektor and Elektor Boards available from stock.
Most difficult or unusual items for Elektor projects normally available from stock. Write or phone for details.
Quantity and trade enquiries welcomed for all components.

IC's

2650C	clock	40 pin	77p
AY-3-0212	music generator	14 pin	480
ES2001	D/A	7-03	86
LM301			
LM308	transistor array	14 pin	.99
LM309K/D	simulator	24 pin	78
LM311DT	comp	8 pin	87p
LM317K	FET speed	T05	126
HL2430	Quadrature	16 pin	.99
ICM7226A	clock time base	8 pin	1795
ICM7205	digit scan/dec	Full pack	495
L129	5 V regulator	TO220	2400
L130	12 V regulator	TO220	2400
L131	18 V regulator	TO220	2400
LF156	B. Fet opamp	T05	126
LD110C	digital DVM ic assisser	18 pin	1495
LQ81.1C	analogue DVM		835
LM1889	VHF Mod	16 pin	1.50
LM301AN	opamp	8 pin	75
LM305H	regulator	T05	86
LM309K	5 V 1 amp reg	T03	1.10
LM310H	voltage comparators	T05	366
LM311N	voltage comparator	8 pin	366
LM311H	voltage comparator	T05	366
LM318N	opamp	8 pin	366
LM318H	opamp	T05	366
LM320H	5 V regulator	T05	366
LM323H	5 V 3 amp reg/ic	T03	366
LM337H	+ 8 – 13 V regulator	T05	366
LM378N	quad opamp	14 pin	1.50
LM379N	dual audio pwr amp	14 pin	1.50
LM380N	2 watt audio amp	8 pin	1.50
LM555N	timer	8 pin	75
LM556N	dual timer	14 pin	1.40
LM560CN	PLL	16 pin	2.50
LM567H	PH tone decoder	8 pin	210
LM709N	opamp	8 pin	105
LM709CN	opamp	8 pin	70
LM723CN	voltage regulator	T05	86
LM741CN	opamp mfg.	14 pin	66
LM747CN	opamp	8 pin	90
LM748CN	opamp	T05	90
LM1815N	stereo comp multivibrator	14 pin	2.75
LM1889N	video detector	14 pin	1.50
LM1894N	dynamic noise reducer	14 pin	3.00
LM1973N	Comp ion/vibrator	T05	2.25
LS390N1	Dual decade	TO40	410
LM1830	rm/phase generator	16 pin	11.75
MC10C	logic gate generator	16 pin	1.50
MC1310P	stereo multiplex	14 pin	2.50
MC1312P	phase lock loop	16 pin	4.50
MC1314P	12 V reg DIL	14 pin	4.50
MC3301P	logic control 4D	16 pin	8.50
MC3302P	quad opamp	14 pin	1.50
MC14584B	dual trigger/ic	14 pin	2.50
MC14411P	BAUD rate gen	24 pin	14.50
MM5369N	3½ DVM ic	40 pin	4.50
MM5387N	3½ Display driver	28 pin	1.35
MM5314N	clock 12/24 hr	24 pin	2.50
MM5240N	clock 4 DIGIT	24 pin	2.50
MM5316N	clock 12/24 hr	24 pin	2.50
MM5316AN	clock 4 DIGIT	24 pin	2.50
MM5312N	clock 6 DIGIT	24 pin	2.50
MM5314N	clock 4 DIGIT	24 pin	2.50
MM5312N	clock 6 DIGIT	24 pin	2.50
MM5316